Table of Contents

Cautions and Warnings 5
1.Control panel general information 6
1.1 Provided Options: 6
1.2 Options with requirements 6
2. Components of Fire Alarm Panel 7000M 10
2.1 Base DIN module – TYPE BM 10
2.2 Loop DIN module - TYPE LC 11
2.3 Basic I/O DIN module – TYPE BIO 12
2.4 Connection examples 14
2.5 Power supply unit (PSU) module 15
2.6 Printer Module (optional) 18
2.7 Panel repeater (optional) 20
3. Connections of 7000M components 21
3.1 Network connection 21
3.2 How to connect base detector to loop 22
3.3 Branch connection 22
4. 7000M Menu Organization 24
4.1 Menu “Status” 24
4.2 Menu “Disable” and “Inhibit” 25
4.3 Menu “System” 26
4.4 Menu “Service” 27
4.5 Menu “Print” 28
5. SETUP MANUAL 7000M 29
5.1. Generating of configuration file 7000M-full-system.xml by panel 29
5.1.1 Service / Addressing / Loops / All Loops 29
5.1.2 System / USB copy / Addr. Config. 30
5.1.3 System / USB copy / Eject USB 30
5.2 Basic programming of 7000M-full-system.xml by WinUniConfig tool 31
5.2.1 Creation of D, A and P zones 31
5.2.1.1 Creation of Detection zones (D zones) 31
5.2.1.2 Creation of Alarm zones (A zones) 31
5.2.1.3 Creation of Protection zones (P zones) 32
5.2.1.4 Loop device configuration 32
5.2.2 Creation of BIO module devices 33
5.2.3 Panel BUI 33
5.2.4 Sounder Defaults 34

5.2.5 Day-Night settings: 34
5.2.6 Sensor Defaults 35
5.2.7 Standard mode: 35
5.3 Upload configuration file 7000M-full-system.xml and 7000M.sh back to the panel 35
5.3.1 Update/Upload 7000M.sh and 7000M-full-system.xml: 35
5.3.2 USB safety Eject: 36
5.3.3 Panel software shutdown: 36
5.3.4 Panel hardware restart: 36
6. Coincidence modes – dependency on more than one alarm signal: 37
6.1 CI-Mode A 37
6.2 CI-Mode B 38
6.3 CI-Mode C 39
7. 7000M Operational modes 41
7.1 Normal operation 41
7.1.1 Description 41
7.1.2 Indication 41
7.2 Fire mode 43
7.2.1 Description 43
7.2.2 Indication 43
7.2.3 Using keypad 44
7.3 Fault condition 46
7.3.1 Description 46
7.3.2 Indication 46
7.3.3 Using keypad 48
7.3.4 Faults list 48
8. Disable condition 51
8.1 Description 51
8.2 Indication 51
8.3 Disable Procedure 52
8.4 Using keypad 53
9. Inhibit condition 54
9.1 Description 54
9.2 Indication 54
9.3 Inhibit Procedure 55
9.4 Using Keypad 56
10. Test condition 57

10.1 Description 57
10.2 Indication 57
10.3 Procedure of Test 58
10.4 Using keyboard 59
11. Evacuation 60
11.1 Description 60
12. Printer (optional) 60
12.1 Description 60
13. Event log 61
14. Status 62
15. Menu Disable 63
16. Menu Inhibit 67
17. Menu System 72
18. Menu Services 80
19. Menu Messages 88
20. Menu Print 89
21. Pre-installation 91
21.1 Location 91
21.2 Warranty 92
21.3 Mounting Height / Space Requirement for Control Panel 92
21.4 Power Supply Unit (PSU) 94
21.5 Battery installation 95
21.6 Panel network “CAN” redundant connection 97
21.7 Panel - Repeater Connection (RS-485) 97
22. Manufacturer of re-initialization of fire alarm counter 100
This procedure allows root access to Linux based module. On that way all applications and firmware could be updated. Than execute commands: cd/7000M ./clear-fires.sh Yes 101
23. System information 101
24. Panels at network - information 102
25. Initialization of contour devices 103
25.1 Exchange or replacement of devices of the same type 104
25.2 Swapped devices of different types 106
25.3 Replacing devices of different types 106

Addressable Modular System 7000M

Instruction manual

Revision 3.3 - 15/09/2023

Cautions and Warnings

Before commencing with Installation or operation of the panel, please read this manual carefully. If you are unclear on any point DO NOT proceed. Contact the manufacturer or supplier for clarification and guidance.

Only Skilled service personnel should undertake the Installation, Programming and Maintenance of this equipment.

This product has been designed to comply with the requirements of the Low Voltage Safety and EMC Directives. Failure to follow the installation instructions may compromise its adherence to these standards.

This Fire Alarm Control Panel is compliant with the requirements of EN 54-2:1997+A1:2006 & EN 54-4:1997+A1:2002+A2:2006
Where appropriate, reference is made in this manual to relevant sections of the EN-54 standard for clarification and to ensure that the installation is compliant with the requirements of EN-54.

1.Control panel general information

● Input voltage:	$110V_{AC}$ - $240V_{AC}$; 50/60Hz
● Pmax:	185W
● Operation temperature:	-5° to +40°C
● Humidity:	up to 93% without condensation
● Cabinet size:	419x204x520mm
● Weight:	31kg including the batteries

1.1 Provided Options:

● Number of Loop Addressable Devices per loop – up to 210
● Number of Loop Addressable Devices per panel – up to 2 100
● Number of Loop Modules per Panel – up to 5 (total 10 loops)
● Number of Loop Modules per System – up to 32
● Number of BIO modules – up to 5 per panel
● Number of Addressable devices per System – up to 13 440
● Detection zone – contain up to 32 loop detectors, fire inputs or/and manual call points
● Detection zones per Panel / System – up to 1023 / 30 per loop
● Alarm zones per Panel/ System – up to 1023 / 30 per loop
● Protection zones per Panel / System – up to 1023 / 30 per loop
● Alarm zones and Protection zones can be activated from any Detection zones (One Detection zone cannot activate two Alarm zones)
● Configurable Week schedule (Day/Night mode) – sensitivity and logic change to detectors, delays change in Alarm zones
● Configurable sounder melodies in alarm and pre-alarm state (Warning-state) for every Alarm zone.
● Panel Network Connection – redundant CAN network support up to 16 Panels, up to 13 440 detectors
● Maximum number of addressable and conventional fire alarm devices – up to 35 per loop, up to 350 per panel connected to the loops – conventional and addressable devices

1.2 Options with requirements

● Output to fire alarm devices
● Control of fire alarm routing equipment
● Output to fire alarm routing equipment
● Alarm confirmation input from fire alarm routing equipment
● Configurable output to fire protection equipment,
  – LED indication for activation
  – Input for the reception of a confirmatory signal from Fire protection equipment, indicated by means of separate indicator
● Fault monitoring fire protection equipment

- Delay to outputs, Day/Night mode
- Dependencies on more than one alarm signal
  - CI Mode A (Detecting fire by double zone activation)
  - CI Mode B (Detecting fire by two zones activation)
  - CI Mode C (Detecting fire with inspection time)
- Alarm counter – up to 9999 (can be delete by script at level access 4)
- Fault signals from points
- Total loss of power supply
- Output to fault warning routing equipment
- Disablement of addressable points

Heat Detector type of response:

- **A2R** – Detector activates by temperature increasing
- **A2S** – Detector do not respond below 54C

Smoke Detector sensitivity:

- **Low**
- **Medium**
- **High**

Combine detector sensor logic**:**

- **only heat detection**
- **only smoke detection**
- **Smoke or Heat detection** (combine detector goes into fire mode when either smoke or heat detector are activated)
- **Both** (combine detector goes into fire mode when smoke and heat detector are activated)

Detection zone (**DZ**) – is defined as a zone with one or more points (automatic fire detectors, gas detectors, manual call points, Inputs) that logically belong together, determined by geographical/functional parameters. Each zone allows devices only from one loop or one BIO.

Alarm zone (**AZ**) – is activated by one or more detection zones. Within the same alarm zone, alarm sounders give the same audible signal.
Geographically associated alarm zones can be defined as *next zones,* such can activate outputs for alarm zones adjacent to the incident. Each zone allows devices only from one loop or one BIO.

Basic Input Output Module (BIO) – DIN module equipped with 2 relay outputs, 2 monitored (controllable outputs), 2 monitored inputs and 1 user output. Can be connected to 5 modules per panel. Each input and output can be configured with different functions

Protection zone (**PZ**) – is activated by one or more detection zones. Containing and control of outputs of the composition of Loops devices and BIO modules. Each zone allows devices only from one loop or one BIO.

Fire Alarm Device (**FAD**) – output intended to control conventional sounders from BIO

Fire Protection Equipment (**FPE**) – configurable BIO output or loop input/output module, manages peripheral devices as fire doors, fire curtains, access control, lifts, and escalators, isolating and suppressing fire progress, as well as providing an escape route

Fault monitoring input of fire protection equipment (FPE Fault Input) – receive fault warning signals from controls of automatic fire protection equipment

Fire protection equipment input confirmation (FPE Activation Input) – Monitoring Input programmable for confirmation of receiving activation of FPE output

Fire Brigade Routing Equipment (**FBRE**) – Controlled Monitoring Output – activated in case of fire event. Refer to EN-54-2, p.7.9 – this output signals for fire event to fire alarm routing equipment

Fault Warning Routing Equipment (FWRE) – Controlled Monitoring Output – normal state continuously ON, in case of Fault event Output is in state OFF. Refer to EN-54-2, p.8.9- this output signals for fault warning condition and signal is also warned in case of de-energized Control panel

Fire Brigade Routing Equipment confirmation input (FBRE conf. input) – configurable BIO monitoring input, programmable for confirmation of receiving signal from fire alarm routing equipment (FBRE)

Fault Warning Routing Equipment confirmation input (FWRE conf. input) – configurable BIO monitoring input, programmable for confirmation of receiving fault event

***Note!** *Relay outputs configured as Fire alarm device (EN54-2, p. 8.2.5 a)), Fire protection equipment (EN54-2, p. 8.2.4 f)), Fault warning routing equipment (EN54-2, p. 8.2.4 g)) or Fire alarm routing equipment (EN54-2, p. 8.2.5 b)) are non-compliant configurations according EN54-2! For full compliance to EN54-2 use only Monitored output option to configure these outputs.*
** Note is also applicable for configuration of addressable Input Output device 7203M*

	Relay 1	Relay 2	Monitoring Output 1	Monitoring Output 2	Monitoring Input 1	Monitoring Input 2	User Output
FAD	√ *	√ *	√	√			
FPE	√ *	√ *	√	√			
FBRE	√ *	√ *	√	√			
FWRE	√ *	√ *	√	√			
Common	√	√	√	√	√	√	
FBRE conf					√	√	
FWRE conf					√	√	
Fire Input					√	√	
FPE Fault					√	√	
FPE Activation					√	√	
Ext. Fault					√	√	
Fire Enter							√
Fire Leave							√
Fault Enter							√
Fault leave							√

Table 1: Possible programming of Basic Input Output module (BIO) devices

Access Level 1 – gives information about the state of the control panel and user intervention as mute the panel buzzer - no user key required

Access Level 2 – gives information about the state of the control panel and the fire devices and user intervention as mute the Sounders, panel buzzer, Start an Evacuation - require turned user key

Access Level 3
– gives permission over a password to programming and changing configuration of the Control panel by configuration tool WinUniConfig.exe (needed flash drive) – it's required placed turned user key and valid password (default pass F1F1F2F2);
– gives access to the internal part of the panel for a maintenance purpose – PSU, fuses, modules and etc.; (needed screwdriver);

Access Level 4 – gives permission to update firmware of panel and accompanying modules. Applicable also to access procedure of re-initializing the fire counter integrated into the panel. See p.22.

2. Components of Fire Alarm Panel 7000M

2.1 Base DIN module – TYPE BM

- Base DIN module is mandatory for panel 7000M. Each panel includes only one module. Module is always installed on the first position of DIN rail, next to the Power supply module. Base DIN module is directly power supplied over connector.
- The module includes detachable and standard connectors for interface connection:
- redundant CAN 2.0B connection to other 7000M panels – up to 16 panels per system;
- RS485 for connection with Panel repeaters or Zone indication led board extenders;
- USB host – Upload/Download panel configuration and update panel settings (requires Access level 3);
- micro-USB – for printer connection;
- Ethernet LAN port – for connection to BMS software connection or remote diagnostic access;

Base Module preview:

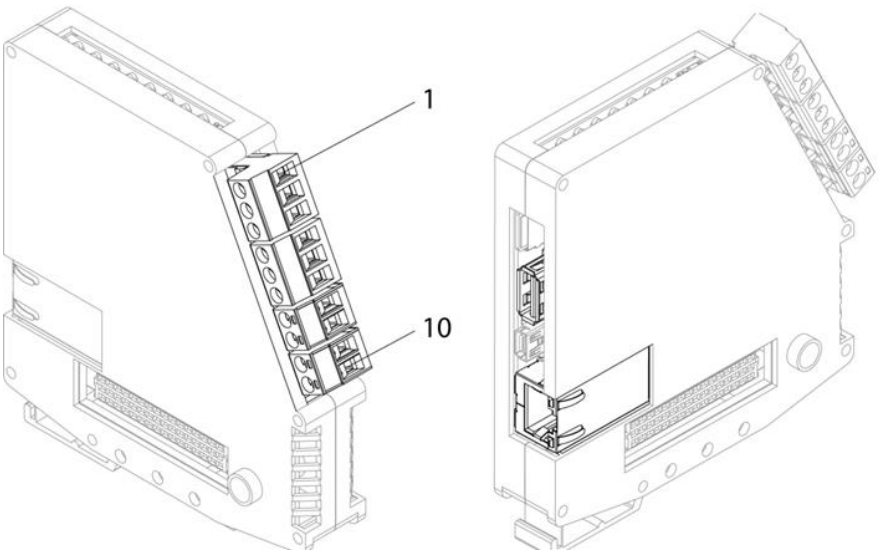

① CAN1 H ⑥“CAN0 L
② CAN1 GND ⑦„RS 485 B”
③“CAN1 L” ⑧„RS 485 A”
④“CAN0 H” ⑨ Not used
⑤CAN0 GND ⑩Not used

Technical Data:

- Connecting type: – DIN rail
- Modules per panel – 1

- Maximum Consumption: – 60-70mA/5 VDC
- Power supply (ensured by PSU module): – (27,6 +1/-8) VDC

Note: If repeater is not present in configuration, Base's RS485 termination 120Ohm is needed.

2.2 Loop DIN module - TYPE LC

Each loop DIN module incorporates two fire alarm addressable loops in one module. Every loop can service up to 210 addressable devices (up to 2 100 addressable devices per panel use cable 1,5mm²; up to 2 100 meters) marked as "M" series: Heat Detector FD7120M, Smoke Detector FD7130M, Combine Detector FD7160M, Manual Call Point FD7150M, Input-Output Module 7203M, CNG Detector 71CNG, Sounder 7206M, Base-Sounder 7205, manufactured by UniPOS Ltd.

Integrity of transmission path

Each addressable device from the M series is integrated with a short circuit isolator. This allows the system to still function in the event of a section of the cable becoming short circuited.

Loops are capable of independently powering and receiving signals from each end of the loop – in case of short circuit on the loop, connected addressable devices will limit the impact of the short circuit splitting the positive wire in the point of intervention. This will lead to an open wire fault and two faults for activated isolators.

In each panel can be mounted up to 5 modules (10 loops maximum).

Installation of loop module on DIN rail must be next to the Base DIN module. All loop modules shall be stacked together without mixing different types of modules e.g. installing Basic I/O DIN module between two loop modules is not allowed.

Loop DIN module preview

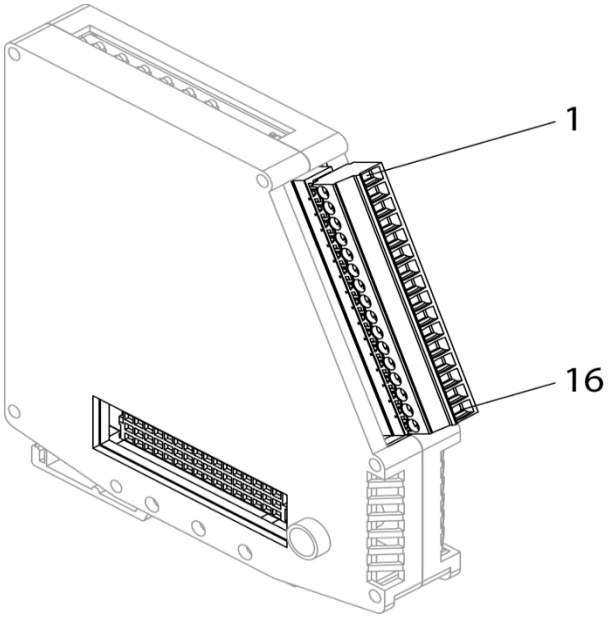

① Loop 1"+" start	⑨ Loop 2"-" start
② Earth	⑩ Loop 2"+" end
③ Loop 1"-" start	⑪ Earth
④ Loop 1"+" end	⑫ Loop 2"-" end
⑤ Earth	⑬ not used
⑥ Loop 1"-" end	⑭ not used
⑦ Loop 2"+" start	⑮ Earth
⑧ Earth	⑯ Earth

Technical Data:

- Connecting type: – DIN rail
- Connecting line to loop: two-wire shielded fire rated cable (recommended 0,75 – 1.5mm²)
  Note: Four core cable must not be used!
  Important: Always connect shielding core of corresponding loop to Earth terminal
- Loops per module – 2
- Modules per panel – 5
- Maximum resistance of a loop (incl. all contacts and built–in isolators): – 28Ω (- wire)

(210 devices, 2 100 m distance) – 60Ω (+ wire)

Note: Line resistance depends also on type of the fire cable that is used. For more information, please check cable specification characteristics.

- Maximum Consumption from one loop: – 300mA/24V_{DC}
- Power supply (ensured by PSU module): – (27,6 +1/-8) VDC

2.3 Basic I/O DIN module – TYPE BIO

Basic I/O DIN module consists of two monitored inputs, two monitored outputs, two relay outputs and one power user output.

In each panel can be mounted up to 5 BIO modules.

Installation of BIO module on DIN rail must be next to the last loop module on DIN rail. All BIO modules shall be stacked together without mixing different types of modules e.g., installing loop module between two basic I/O DIN modules is not allowed.

All BIO inputs and outputs do not take any addresses from loop address space.

BIO DIN module preview

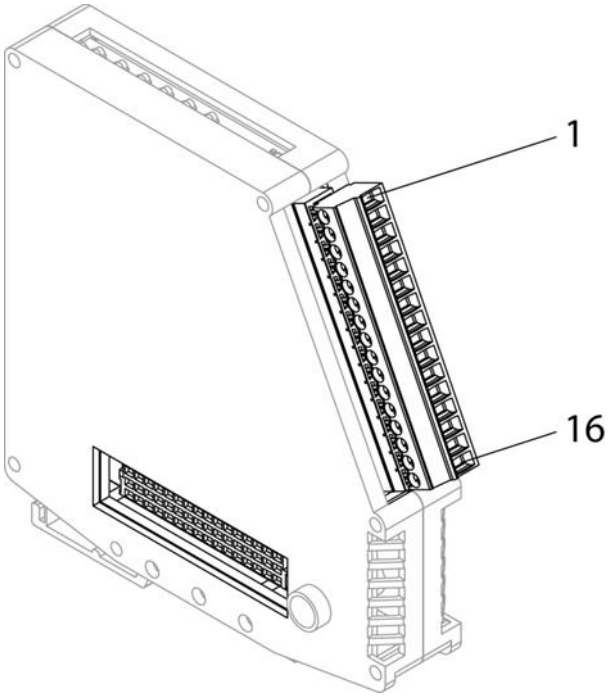

① Relay Output 1 – NO
② Relay Output 1 – COM
③ Relay Output 1 – NC
④ Relay Output 2 – NO
⑤ Relay Output 2 – COM
⑥ Relay Output 2 – NC
⑦ Monitored Output 1 "+"
⑧ Monitored Output 1 "-"
⑨ Monitored Output 2 "+"
⑩ Monitored Output 2 "-"
⑪ Monitored Input 1 "+"
⑫ Monitored Input 1 "GND"
⑬ Monitored Input 2 "+"
⑭ Monitored Input 2 "GND"
⑮ User Output "+"
⑯ User Output "GND"

Technical Data:

Monitored output:

- number of outputs per module – 2pcs
- Type – potential
- Electrical characteristics – (27,6 +1/-8) VDC/0,7A
- End Of Line (EOL) – 1,5kΩ resistor

*EOL shall be connected to pins 7 – 8 and 9–10 for proper work of the monitored output

Relay outputs:

- Type – potential free, switching
- Electrical characteristics – 0,5A/125V_{AC}; 1A/30V_{DC}

Monitored inputs:

- number of inputs per module – 2pcs
- Type – monitored
- EOL – 3,3kΩ resistor

Power supply (ensured by PSU module): – (27,6 +1/-8) VDC

*EOL shall be connected to pins 11–12 and 13–14 for proper work of the monitored input

User output

- number of outputs per module – 1pcs
- Type – potential
- Electrical characteristics – (27,6 +1/-8) VDC/0,7A

Transmission paths circuit lengths

The voltage drop on each transmission path circuit should be calculated to ensure that the minimum voltage at the end of the circuit exceeds the minimum required by applicable devices as FAD, FPE, Fire routing equipment or Fault routing equipment at the minimum circuit output voltage.

The voltage at the end of the circuit is given by:

Minimum Device Voltage = VOUT(MIN) – (IALARM x RCABLE)
Minimum Output Voltage (VOUT(MIN)) is equal to minimum battery voltage 21,5V – 0.5V = 21V
Load Current (IALARM) is the sum of the loads presented by activated connected devices.

Cable Resistance (RCABLE) is the sum of the cable resistance in both cores x cable length.
Cable Resistance (RCABLE) for 1.0mm2 is 0.036Ω / m
Cable Resistance (RCABLE) for 1.5mm2 is 0.024Ω / m
Cable Resistance (RCABLE) for 2.5mm2 is 0.015Ω / m

Insulation Resistance (Core-Core and Core Screen)	>2M Ω

All EOLs are included in zip together with BIO package.

Each BIO hardware input and output can be configured with different function purpose regarding Table 1: Possible programming of Basic Input Output module (BIO) devices. This can be done using WinUniConfig configuration program for 7000M panel series.

Monitored output load specification*

BIO Module Devices	Short	Creeping Short	Normal	Creeping Open	Open
Output **TYPE E (FBRE)** Load	<35Ω +/- 10%	- 10%	1500Ω +/-5 %	+ 10%	<2700Ω +/-10%
Output **TYPE J (FWRE)** Load					
Output **TYPE C (FAD)** Load					
Output **TYPE H (FPE)** Load					

Monitored input load specification*

BIO Module Devices	Short	Creeping Short	Normal	Creeping Open	Open
Input	<508Ω +/- 10%	- 10%	3300Ω	+ 10%	<4950Ω +/-10%

* creeping function are available only after BIO devices calibration from the panel

2.4 Connection examples

- Example of connecting activation button to BIO Monitoring Input:

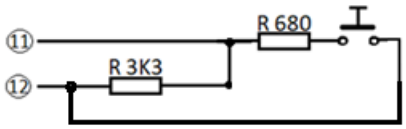

- Example of panel modules installation

Note: DIN order of installing the modules on DIN rail is mandatory

Power Supply Unit – Base Module – Loop Module – Base I/O modules

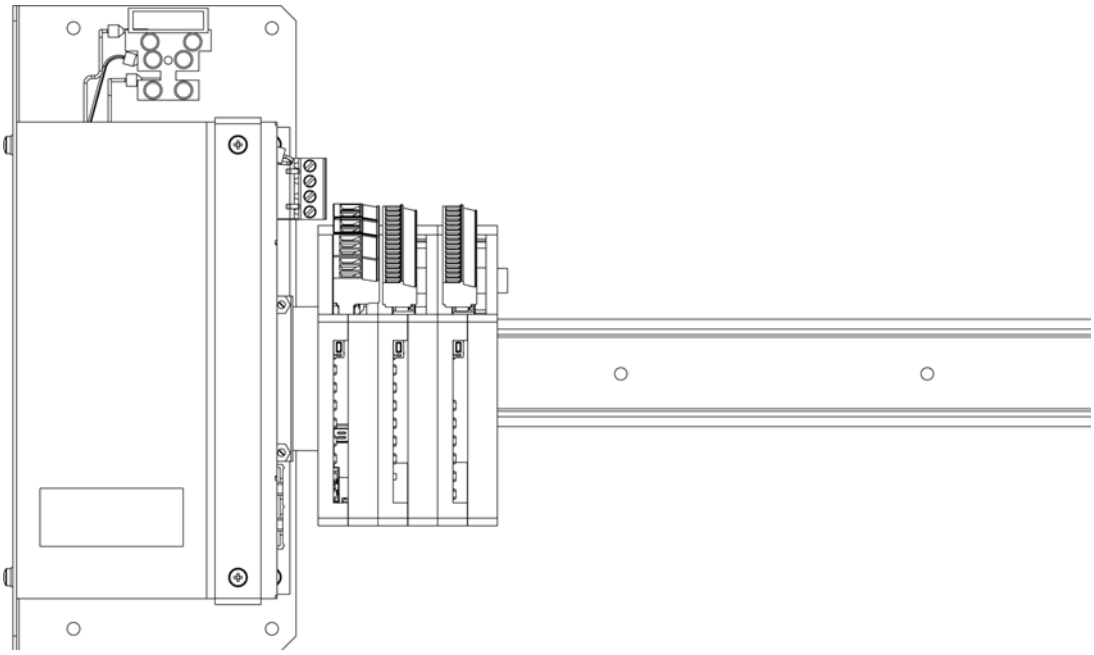

① Power supply unit (PSU)
② Base DIN module – TYPE BM
③ Loop DIN module – TYPE LC
④ Basic I/O DIN module – TYPE BIO

2.5 Power supply unit (PSU) module

Mean Well PSC-160B-C security power supply module is used in 7000M fire alarm panel.

Communication power module

This module has additional functions such as:

- communication with Base DIN module to provide information for voltage of batteries, their temperature (optional), status of mains;
- provide test of the accumulator batteries;
- alert for presence of Earth fault;

- provides 2 user outputs;
- report event for total loss of power;
- report event of defect in batteries or in battery connection;

Mains Power Connections

The fire panel must be on a separate circuit line with fuse 6A.
1. Turn off fuse 6A in the fuse box.
2. A 3x0.75mm2 cable is required, for the connection of the fire panel and the fuse box.
3. Switch ON fuse 6A in the fuse box and connect the fire panel batteries.

Note: Isolation must be kept on the mains cable as close to the terminal points (Live, **N**eutral and Earth) as possible.

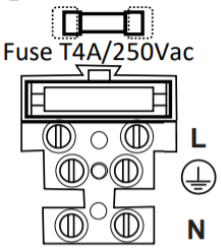

The panel must be connected to the supply earth through the power cable.
Connect the Control panel to the mains supply via a readily accessible disconnect-device (isolation switch) and suitable incorporated in the building installation wiring. The mains cable should be at least 0.75mm2 cable rated at 250V and fused via a 6A anti-surge fuse.

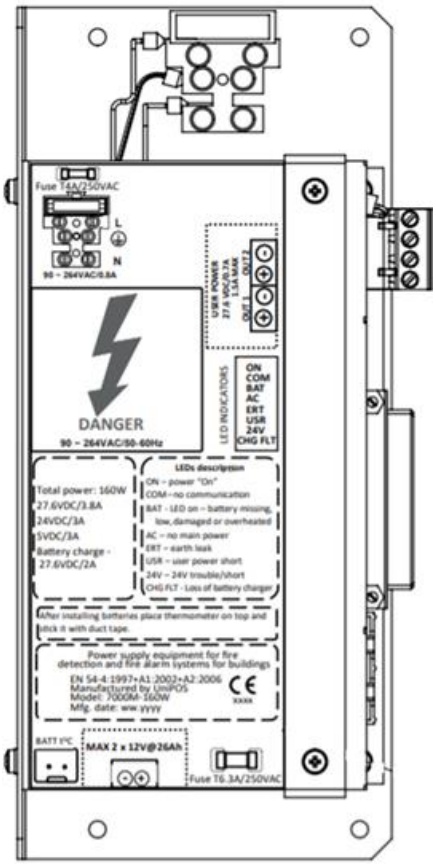

Technical Data:

Main power:

- Input voltage: – $110V_{AC}$ - $240V_{AC}$; 50/60Hz
- P_{max} – 185W
- Max. current consumption at $240V_{AC}$ – 0,8A
- Max. current consumption at $120V_{AC}$ – 1,6A
- cable connection – 3x0,75mm²
- inrush peak current consumption at 120V – 35A
- mains power fuse – 4A

Batteries (not included):

- capacity of recommended batteries* – 26Ah/12V
- number of batteries – 2
- battery type – lead, gel electrolyte
- maximum size batteries – 166mm x 176mm x 126mm +/ - 2mm
- maximum drawn current – 4A
- type of connection – serial
- connection type to batteries – bolt type M5 screw
- fuse batteries – 6A
- maximum internal resistance for connected battery pack – 160mΩ
- maximum internal resistance of the battery pack and its associated circuitry, e.g. connections, fuses – 750mΩ
- Imin / Imax a / Imax b – 0,2/3,8/5,8A

*Recommended model FAAM FLG12-26. Equivalent models can be used but they must have the same technical characteristics such as FAAM FLG12-26 and to be compliant with IEC 60896-21 and IEC 60896-21.

Note: If power to the system is supplied exclusively from the batteries (in case of a power supply failure) and the voltage is below 21,5V, the Power Board 7000M-PSU160 will perform a controlled shutdown (total loss of power). When battery voltage is lower than 19,5V the system will shut down automatically.

Battery Charging

The charging voltage is temperature controlled, so optimal charge for each temperature is maintained.
Charge current for the power supply unit is also controlled, so that the charging voltage will decrease when the charge current reaches 2A.

Attention: The battery temperature sensor must be placed on the batteries. If the sensor is placed in warmer or colder places, the charging voltage will be wrong, and lower battery capacity and/or shorter battery life may be expected.

The charging voltage at 25°C is $27,6V_{DC}$.

Battery Resistance Measurement

Every hour, battery voltage is measured under 5A load (built in Resistor), this load is powered from the batteries for a period of 200ms. Battery is "GOOD" if voltage is not decrease 22V. This measurement procedure started when the battery voltage is over 25V.

Battery Input

Battery input is protected by an electronic short-circuit detector and a regular fuse. If a short circuit is detected, the battery relay will turn OFF within approx. 50ms. System will then report "No Battery "

System Units

Fire Alarm Control Panel – 250mA/27,6V $_{DC}$ (idle) Max. 3,8A/27,6V_{DC}
Repeater Panel – 30mA/27,6V_{DC} (idle) Max. 130mA/27,6V_{DC} (led test indication)

Power Design Consideration

The power supply has 5.8A/27,6V_{DC} available, as 2A/27,6V_{DC} are reserved for battery charging.

2.6 Printer Module (optional)

Printer module come hardware wired and ready to use. It must be configured during configuring panel with WinUniConfig tool to be present for panel, print Fire events and/or Fault events.

Printer can be installed only on panel 7000M and is assembled to panel only in special customer order.

Paper is not included in the printer.

Paper parameters:

– Paper roll size	Max. 32mm (outside diameter)
– Paper Width	58 mm
– Paper Thickness	80 µm
– Recommended paper	JUJO-AF50KS-E (standard grade) JUJO-AF50KS-E3 (high sensitivity) Equivalent types can be used.

1 – Power Led (switch ON)
2 – Line feed paper
3 – Pause (pressed, panel will be in fault "Disconnected Printer")

Printer possible messages:

- **Disconnected –** Disconnected Power Supply or Printer USB
- **End of paper –** change printer paper
- **Offline –** check printer power supply or USB connection.
- **Temp. low or high –** abnormal temp of printer's head;
- **Power low or high –** check printer power supply
- **Head up –** Printer front cover open
- **SYS FAULT DIN signal –** check modules DIN rail connection
- **Fault power supply** – check printer power supply

Note: Printer messages are displayed in the "**Messages**" menu.

2.7 Panel repeater (optional)

Panel repeater BUI contains two type of modules – LCD with keyboard and LED's zonal boards. Repeaters are capable to receive all data from the main panel. Function of control panel and LCD with keyboard repeater are fully mirrored.

Repeater LCD with keyboard preview

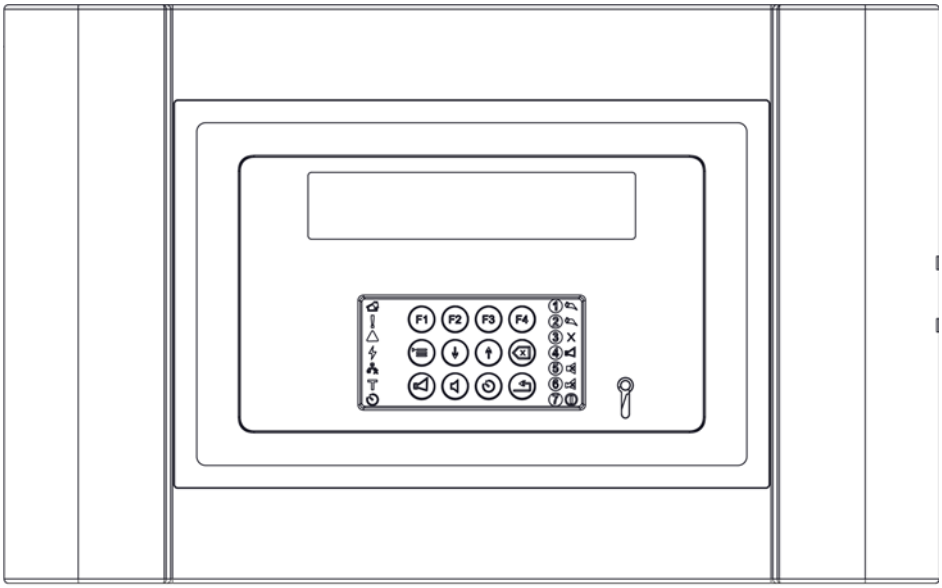

Repeater LEDs zonal preview

Fire panel 7000M is capable to maintain up to 15 repeaters connected by RS485 communication protocol and powered from the Control panel Power supply unit.

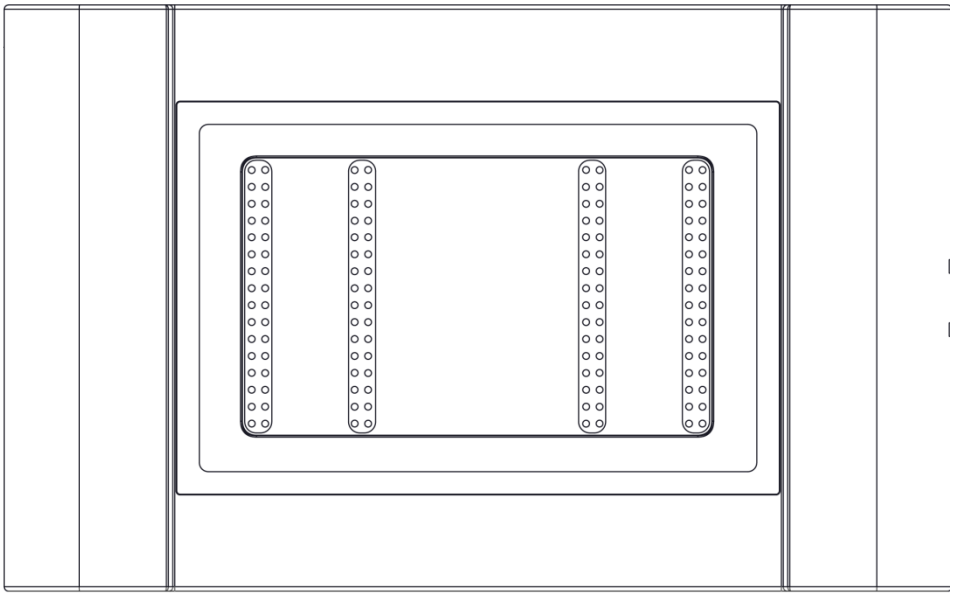

Each repeater can have LED boards connected for specific zone indication.

Technical Data:

- Connecting type: – shielded wire, twisted pair
- Communication interface – RS485
- Max. Repeaters per panel – 15
- Current Consumption – 50mA/27,5V_{DC}
- Connection distance – approx. 1000m*
- Power supply – 21.5V_{DC} - 28V_{DC}**

*The maximum transmission distance is bounded by the cable properties
** In case the connection shall be up to 100m far from the panel, its power supply output can be used to ensure supplying of the repeater.

Important: Always connect shielding (screen) core to Earth terminal from one side, shown as position 6. The other side shielding core shall be connected to terminal 16 of the firstly installed Loop controller 1 on the DIN rail.

If there is no repeater in configuration, terminate with 120Ohm Base's RS485 port.

3. Connections of 7000M components

3.1 Network connection

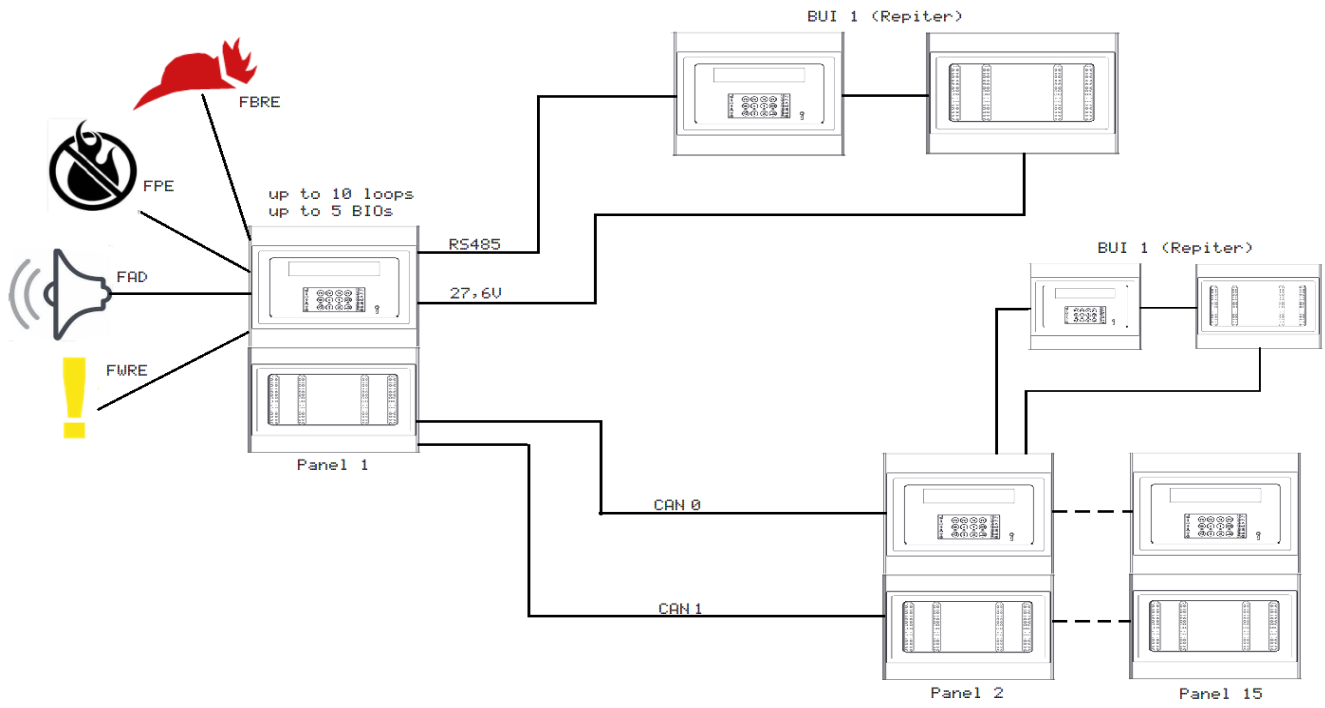

System 7000M can support up to 16 panels in redundant CAN network

3.2 How to connect base detector to loop

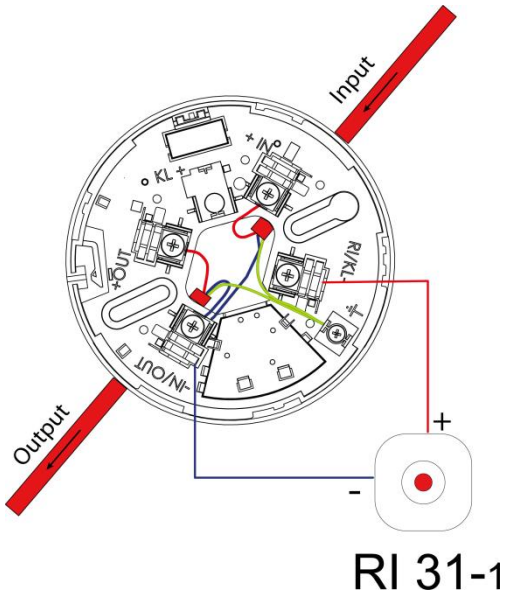

Always connect screen cable on both sides of the cable to the Earth terminal located on the base 7000.

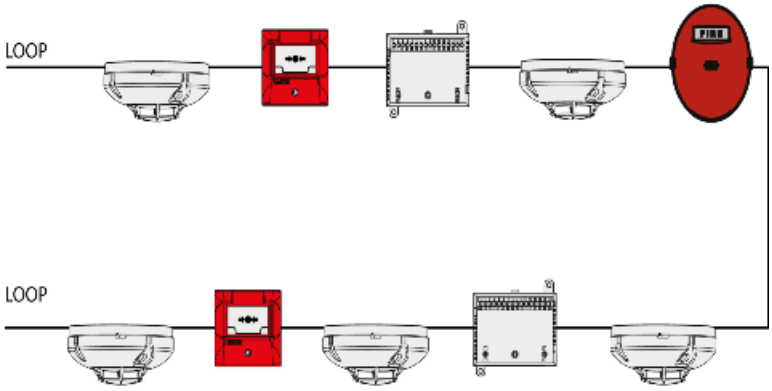

3.3 Branch connection

Branch connection up to 32 fire detectors in a single branch. Number of branches depends only on the number of all detectors 210 (example: One branch-off with 32 pcs. detectors, loop detectors 178 pcs. Two Branch off with 32 pcs. detectors each branch 1oop detectors 146 pcs. etc.)

Note 1: using branch configuration in loops is not recommended due to possible disconnection of a lot of devices in case of branch interruption or short circuit faults.

Note 2: Limitations per branch-up to 3 addressable sounders, up to 3 addressable input/output devices or up to 3 gas detectors

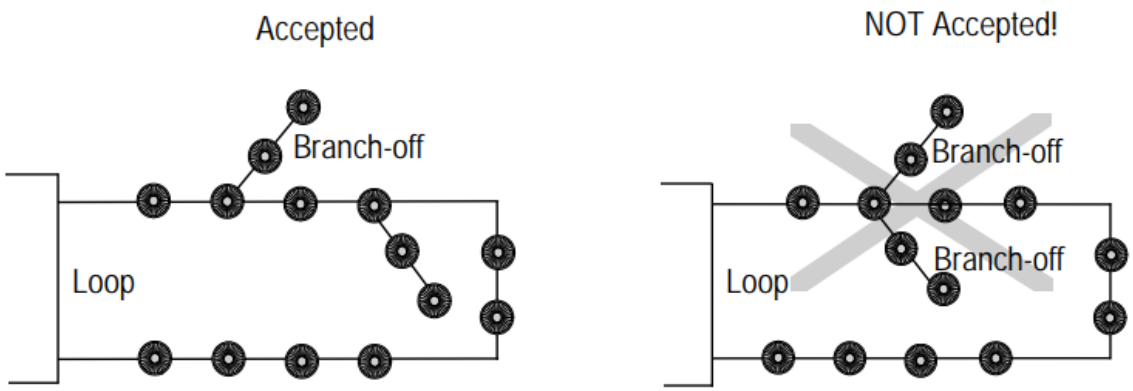

The shown branch connection starts after the loop device, if needed to start before loop device the branch must be connected to +IN instead of -IN/OUT.

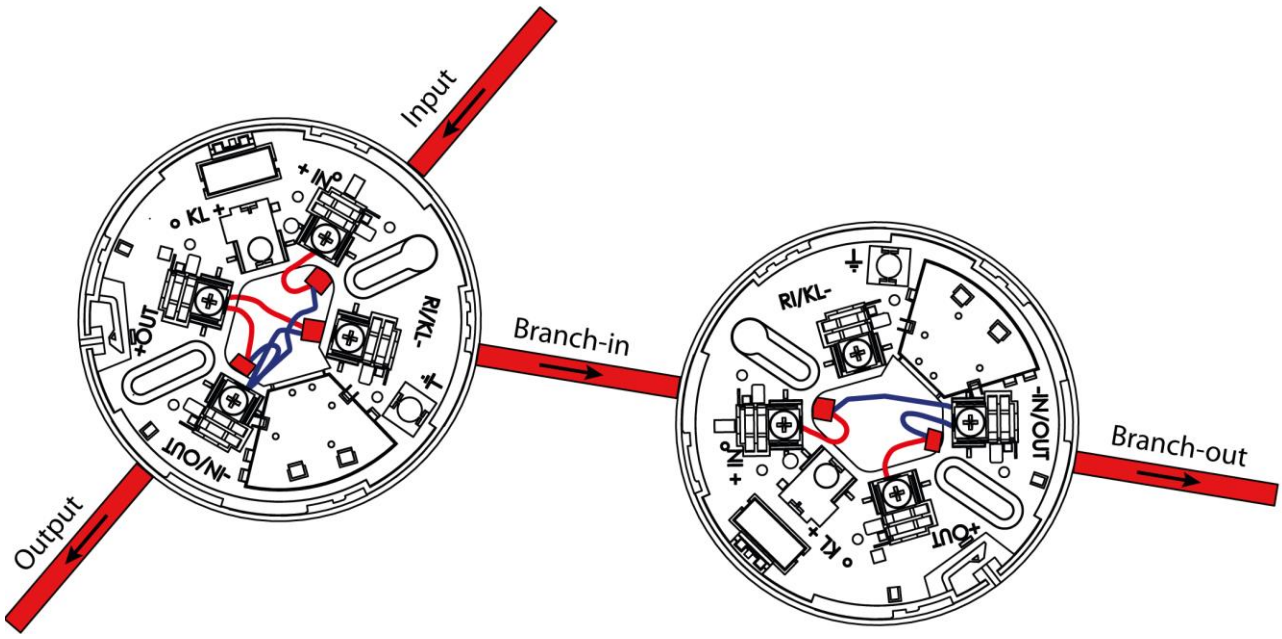

4. 7000M Menu Organization

4.1 Menu “Status”

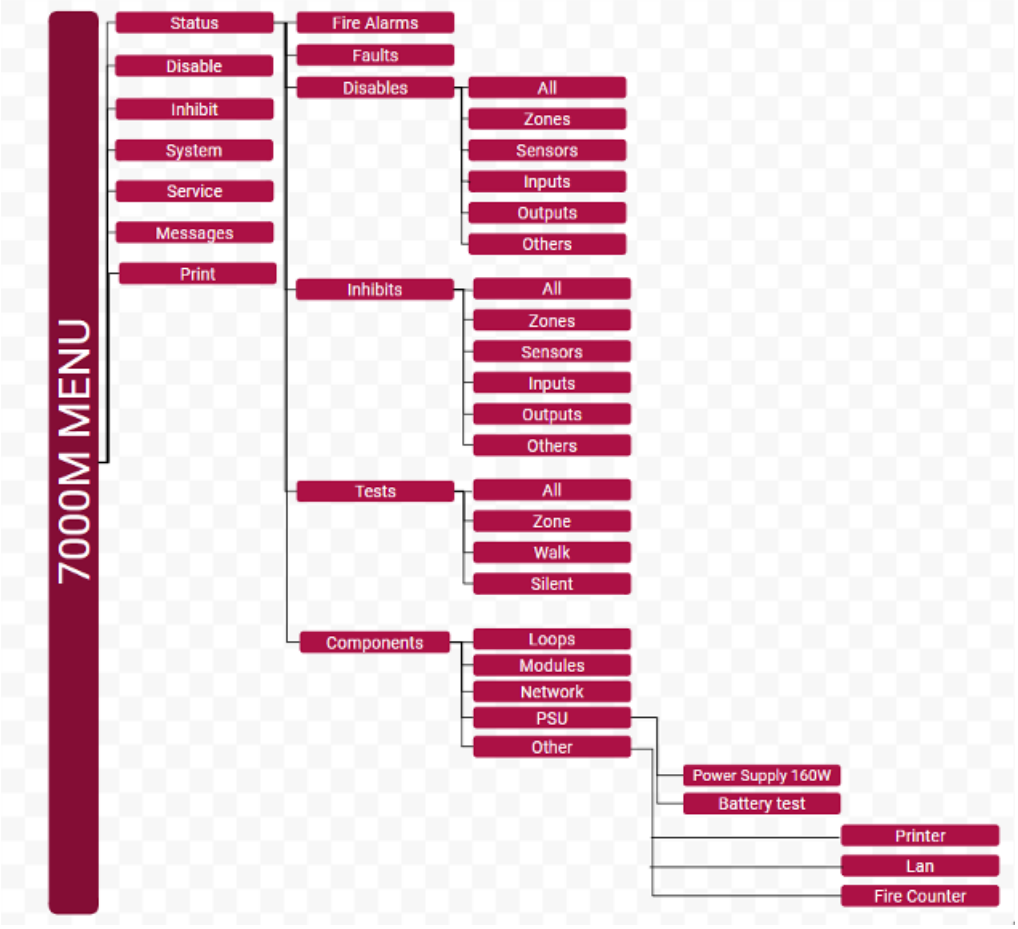

4.2 Menu “Disable” and “Inhibit”

4.3 Menu “System”

4.4 Menu "Service"

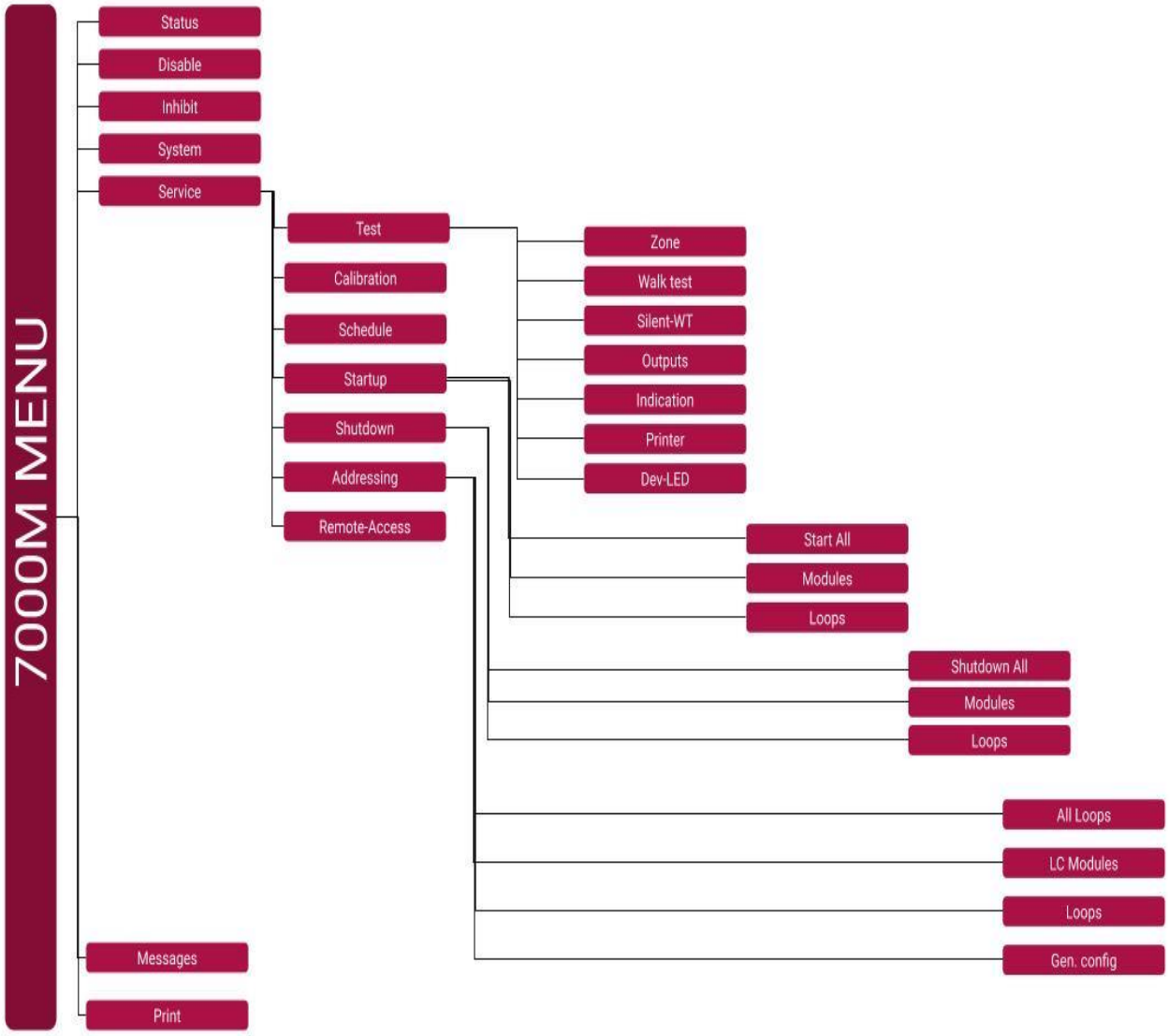

4.5 Menu “Print”

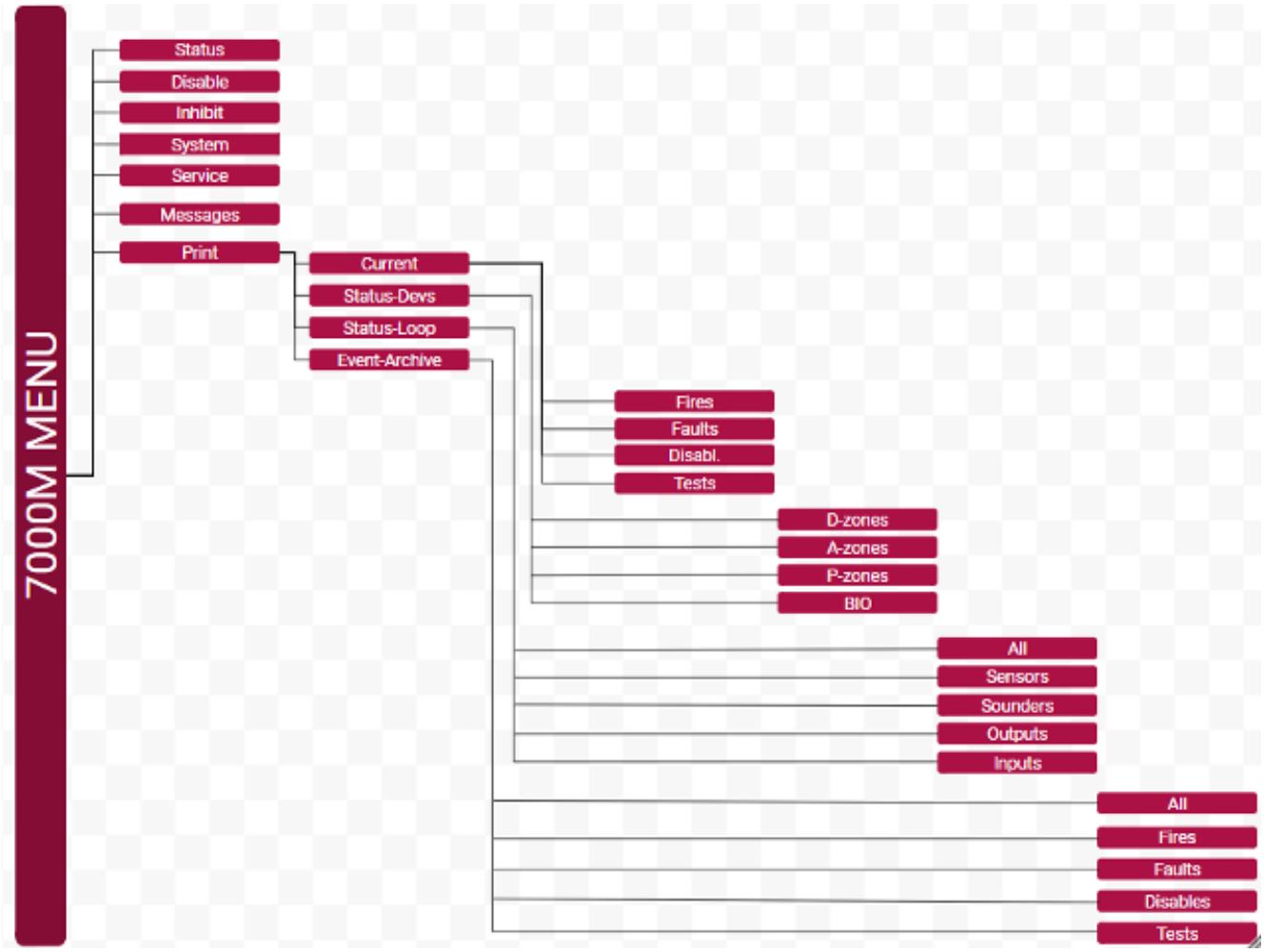

5. SETUP MANUAL 7000M

Already configured hardware loops and BIO modules has to be connected to the loop controller module. The configuration process of 7000M panel starts with addressing all connected modules and peripheral loop devices. The result after this step is generation of XML file which shall be edited with PC based 7000M Configurator.

5.1. Generating of configuration file 7000M-full-system.xml by panel

```
7000M System
Unknown Site
FW Build Jan 24 2019
BUI-0 waiting panel connection
```

```
10:11 [7000M Panel]
 Status->
 Disable->
 Inhibit->
```

Power the fire panel AC~220V and DC (battery) – 24V. After the panel has started, go to menu:

5.1.1 Service / Addressing / Loops / All Loops

– the display visualized the list of loops which will be addressing, with character “*” and flashing status. When the process of addressing is completed

```
10:11 [Service/Shutdown/Shutdown All]
 Enter password: ****
```

```
10:11 [Service/Shutdown/Shutdown All]
 *01 Loop 1
 *02 Loop 2
 *02 BIO Module 1
```

the flashing will stop, and confirmation by pressing F1 is needed.

Success operation is visualized with character “+” before each loop module and the number of the addressed devices.

```
10:11 [Service/Addressing/All Loops]
 *01 Loop 1
 *02 Loop 2
              F1:Save config
```

```
10:11 [Service/Addressing/All Loops]
 +01(11) Loop 1
 +02(11) Loop 2
              F1:Save config
```

NOTE: If addressing failed, please check loop and/or devices connectivity; check for missing devices.

5.1.2 System / USB copy / Addr. Config.

Place a flash drive in the panel USB port and go to menu - **System / USB copy / Addr. Config.** – (default pass F1F1F2F2) list of files with extension “xml” will be displayed, use buttons Up and Down to choose file

“7000M-full-system-AUTO.xml”, save it on the flash drive by pressing button”

```
10:11 [System/USB-Copy/Addr.conf]
 7000M-p-1-system-AUTO.xml
 7000M-p-1-m-1-loop-2-AUTO.xml
                F1:to copy
```

7000M-p-1-m-1-loop-2-AUTO.xml – configuration only for second loop of Loop controller 1.

5.1.3 System / USB copy / Eject USB

System/USB/Copy/Eject USB – (default passF1F1F2F2) press F1 button for safety removing on flash drive.

```
10:11 [System/USB-Copy/Eject USB]


                F1:to copy
```

5.2 Basic programming of 7000M-full-system.xml by WinUniConfig tool

PC ONLY

The file configuration has to be opened with windows application WinUniConfig.exe. Once opened it will display the panel configuration as:

- Loop devices configuration;
- BIO devices configuration;

5.2.1 Creation of D, A and P zones

Use “Panel” icon to create:

5.2.1.1 Creation of Detection zones (D zones)

– containing collection of points (automatic fire detectors, manual call points, Inputs) group together.

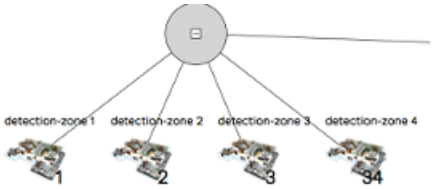

5.2.1.2 Creation of Alarm zones (A zones)

– containing and control of fire alarm devices of the composition of Loops and BIO modules;

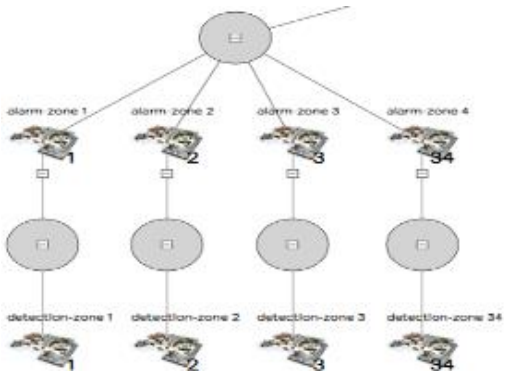

5.2.1.3 Creation of Protection zones (P zones)

– containing and control of outputs of the composition of Loops (Outputs of I/O modules) and Relay and monitored Outputs of BIO modules;

5.2.1.4 Loop device configuration

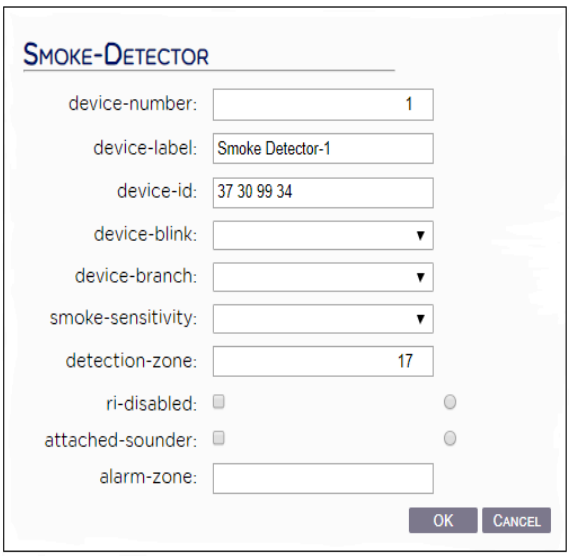

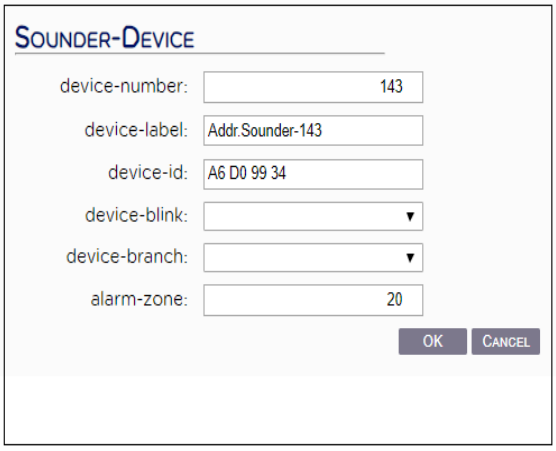

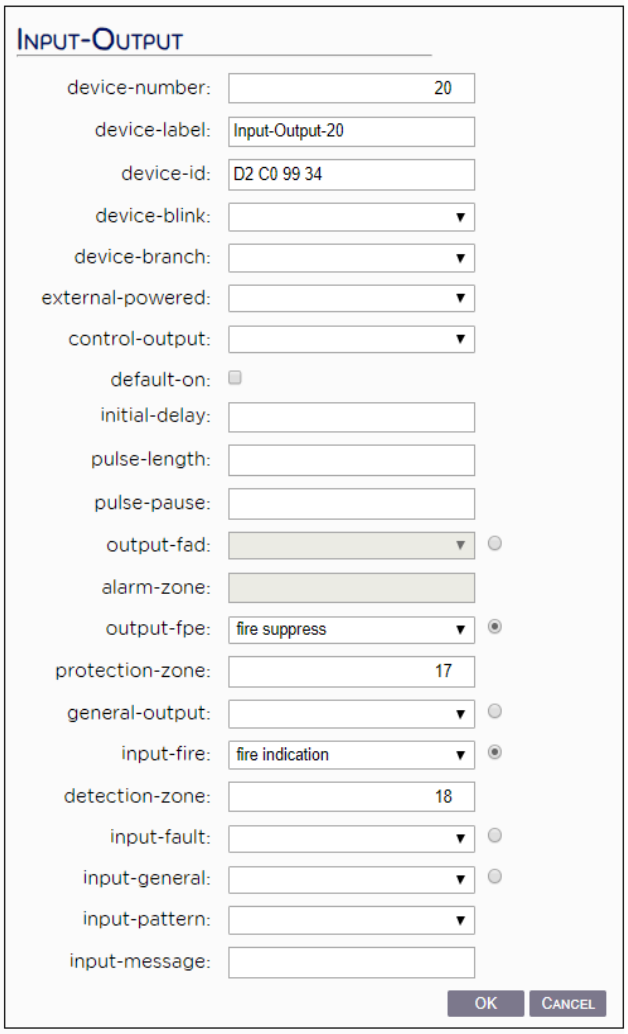

Note: All loop and BIO devices shall be distributed to D, A and P zones

5.2.2 Creation of BIO module devices

– BIO devices: please refer to p. 2.3, BIO devices options.

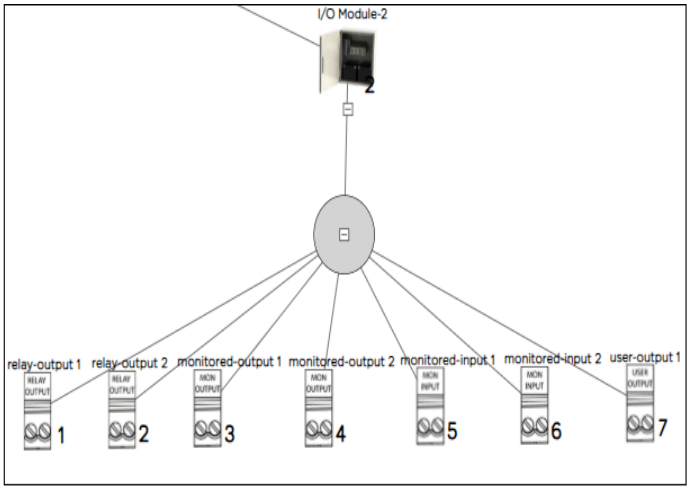

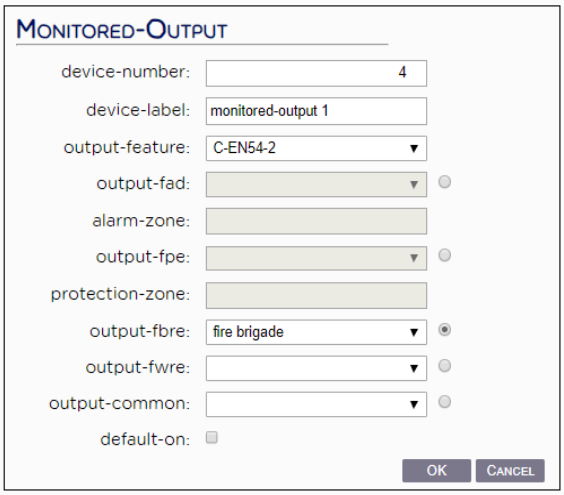

Detection zone – can contain one or more Smoke, Heat, Combine detectors, Manual Call Points, Inputs of I/O's and BIO modules;

Alarm zone – can contain Sounders, Outputs of I/O and BIO devices set as Fire Alarm Devices (FAD);

Protection zone – can contain Outputs of I/O and BIO devices set as Fire Protection Equipment (FPE);

5.2.3 Panel BUI

configured if there are connected panel LED boards.

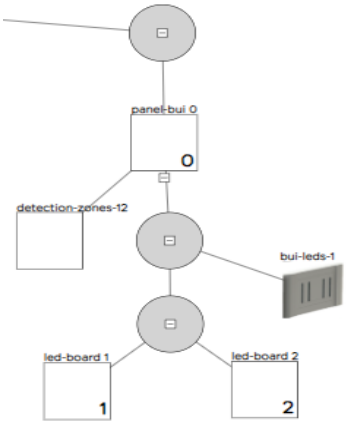

5.2.4 Sounder Defaults

– Sound Type needs to be configured;

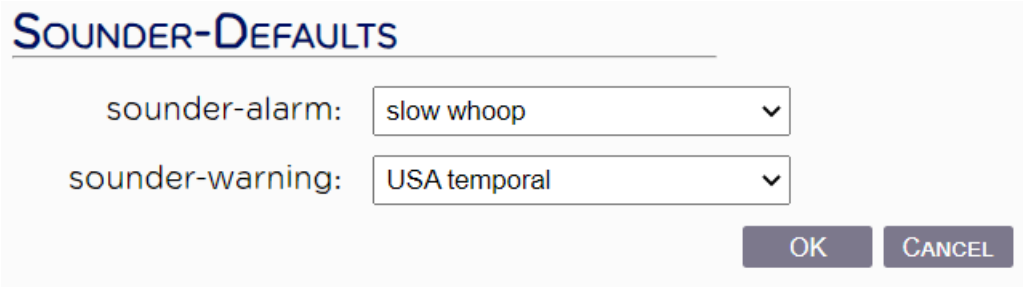

Sounder types:
– **Slow whoop** – melody frequency 500-1200Hz, sound pressure >85dB
– **US Temporal** – melody frequency 970Hz, sound pressure >85dB

5.2.5 Day-Night settings:

- Weekdays
- Day delay
- Night delay
- Day-start
- Day-length

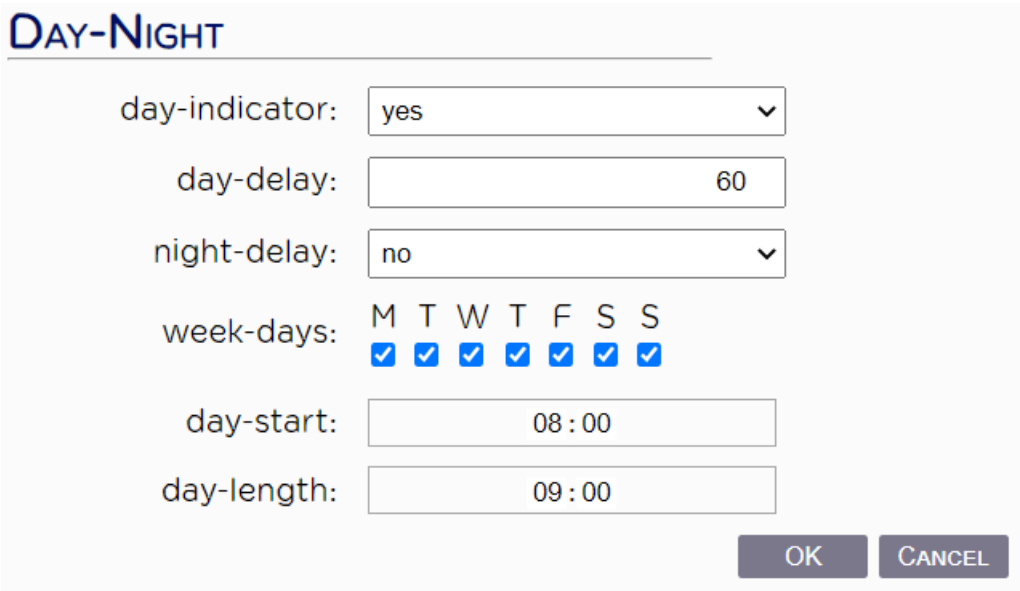

5.2.6 Sensor Defaults

– Sensor sensitivity in day mode needs to be configured, else set configuration of each one sensor in the loop;

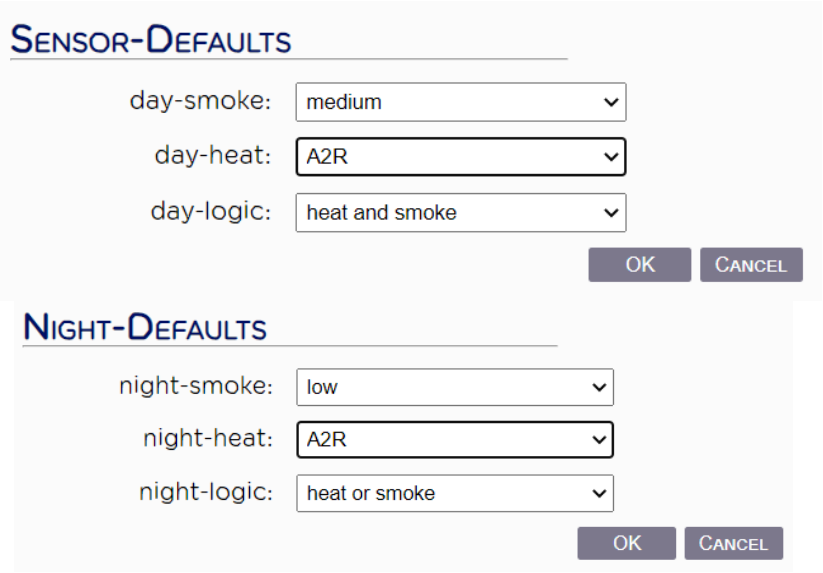

5.2.7 Standard mode:

- Fire panel is in standard mode when "Day-night settings" are not activated/selected;
- There is no automatic change detectors sensitivity in certain time;
- Standard mode requires all Loop devices to be configured.

Save the new configuration by button "**Save As**" on flash drive as file **7000M-full-system.xml**. Then by button "**Generate**" choose tab "**Load Configuration**" generated file **7000M.sh**

5.3 Upload configuration file 7000M-full-system.xml and 7000M.sh back to the panel

5.3.1 Update/Upload 7000M.sh and 7000M-full-system.xml:

System / USB copy / Update (default pass F1F1F2F2) place files: 7000M-full-system.xml and 7000M.sh one by one (by button F1 - copy) on the panel;

5.3.2 USB safety Eject:

System / USB copy / USB EJECT - (default pass F1F1F2F2) – press F1 button to confirm;

```
10:11 [System/USB-Copy/Eject USB]

              F1:to confirm
```

5.3.3 Panel software shutdown:

System / Stop / Panel – (default pass F1F1F2F2) – press F1 button to confirm;

```
10:11 [System/Stop/Panel]

              F1:to confirm
```

```
10:11

     Await panel stop to power off
```

5.3.4 Panel hardware restart:

Restart the panel by resetting the power supplies: AC and DC battery.

After the initialization the panel will start with the new configuration.

6. Coincidence modes – dependency on more than one alarm signal:

6.1 CI-Mode A

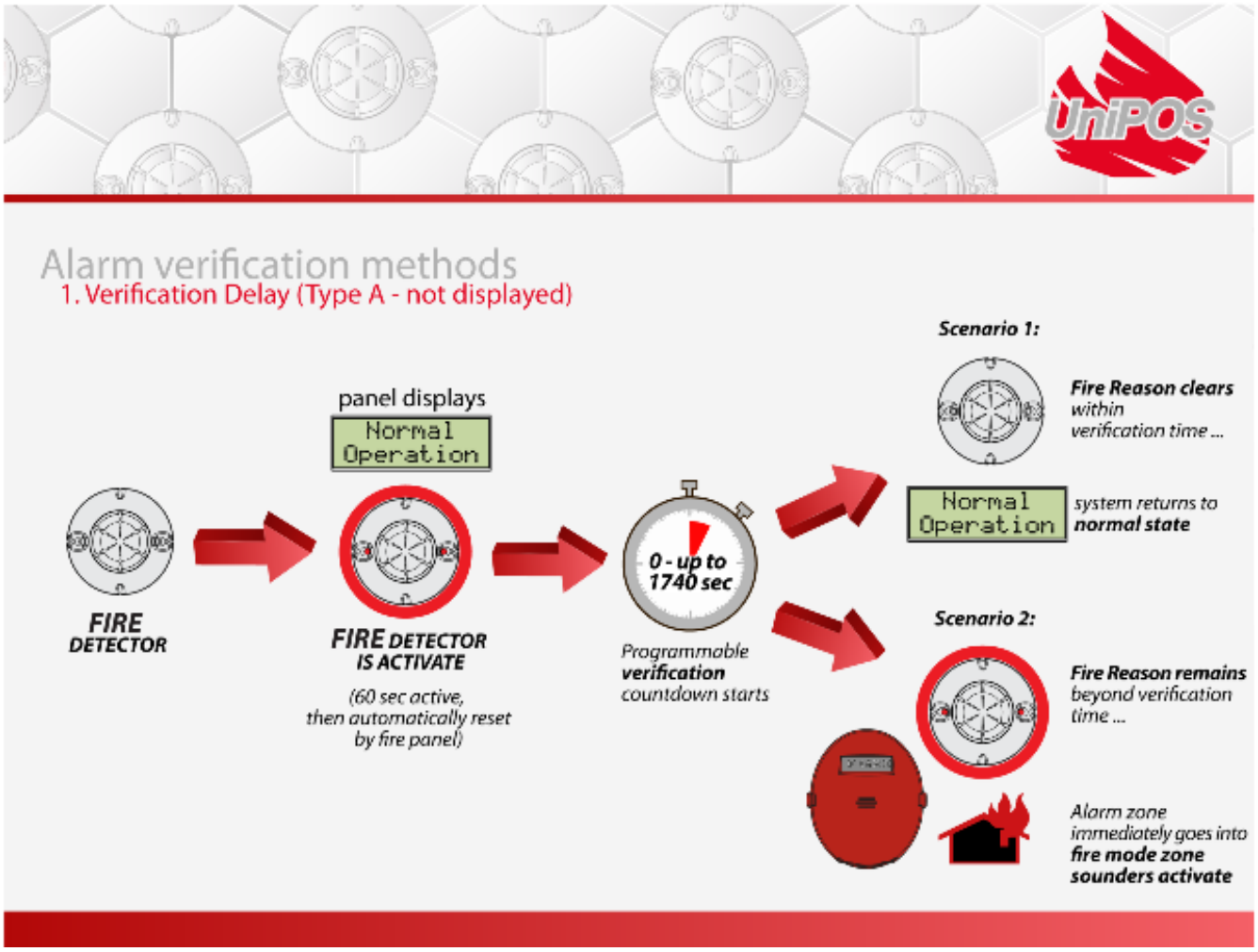

Feature complies with EN54-Part 2, Type A coincidence mode. Single fire detector activation detects fire. It is analyzed at 60 sec. Then FD resets automatically by the control panel. Whether the cause of fire has disappeared or confirmed, if there is a fire confirmation after the time expiration (up to 1740 sec), it is stated in scenario 2. The Fire Alarm Devices are activated with no delay.
This scenario is presented to infiltrate fake device's activation without operator intervention – i.e., there is no need for a panel indication on the first fire detector activation, the second activation the control panel goes into Fire mode – scenario 2, if there isn't a second activation the panel stays in Normal Operation Scenario 1.

6.2 CI-Mode B

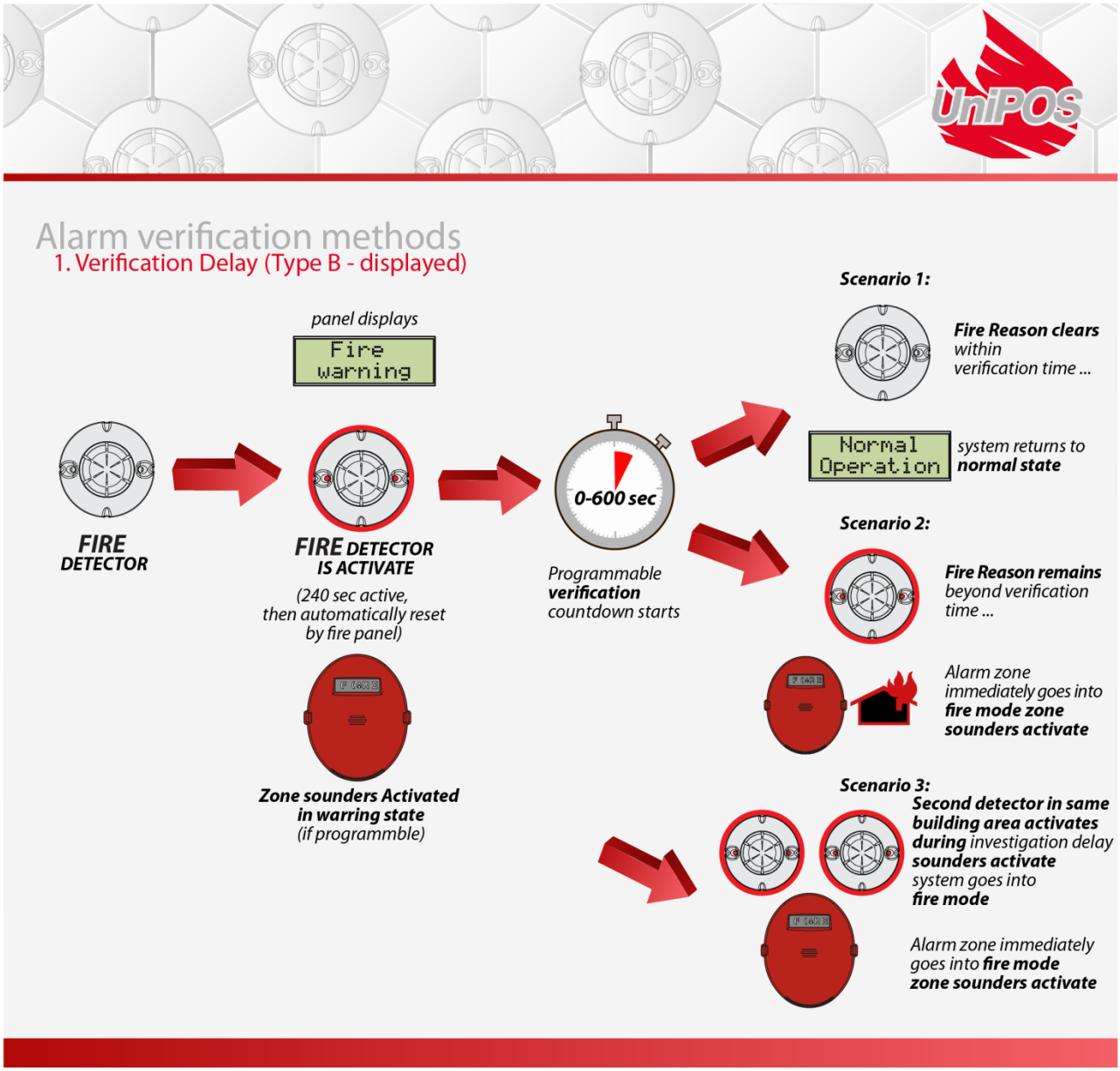

Feature complies with EN54–Part2, Type B coincidence mode. One device or two devices from the same or different area (but guarding the same room) when confirming a fire. The Control panel is in a state of Fire warning, Fire Device – FD will stay activated for 240 sec, before fire panel reset it automatically, then starts the programmable fire-timeout (0 up to 300 sec.) whether we have a fire from the same FD or from another FD in the same/guarding area and if there is a confirmation of the fire within the time, it immediately goes to scenario 2 (scenario 3 respectively). The Fire Alarm Devices are activated with no delay. This CI-mode B is designed to filter false fire alarms without operator intervention. The information of the control display gives sufficient information about the fire event.

6.3 CI-Mode C

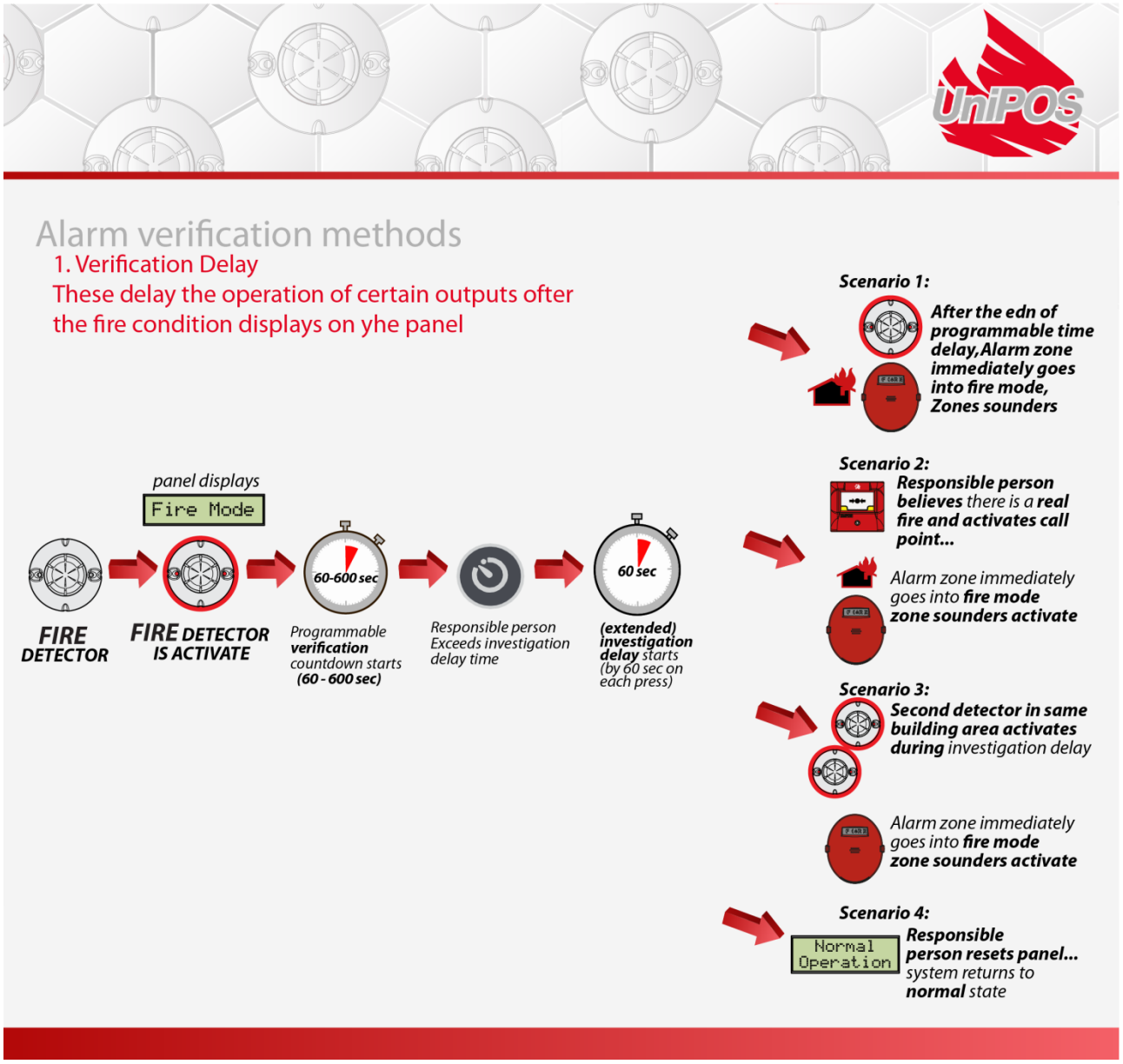

Feature complies with EN54-Part2, Type C coincidence mode. Two devices from the same or different area (but guarding the same room) when confirming a fire. Fire activation of first detector puts the Control panel in Fire mode operator's intervention is expecting. If missing intervention and time delay is up the fire alarm devices are activated. When there is an activation of another detector, fire alarm devices are activated with no delay. If there is an operator's intervention the time delay is exceeded by 60 sec.

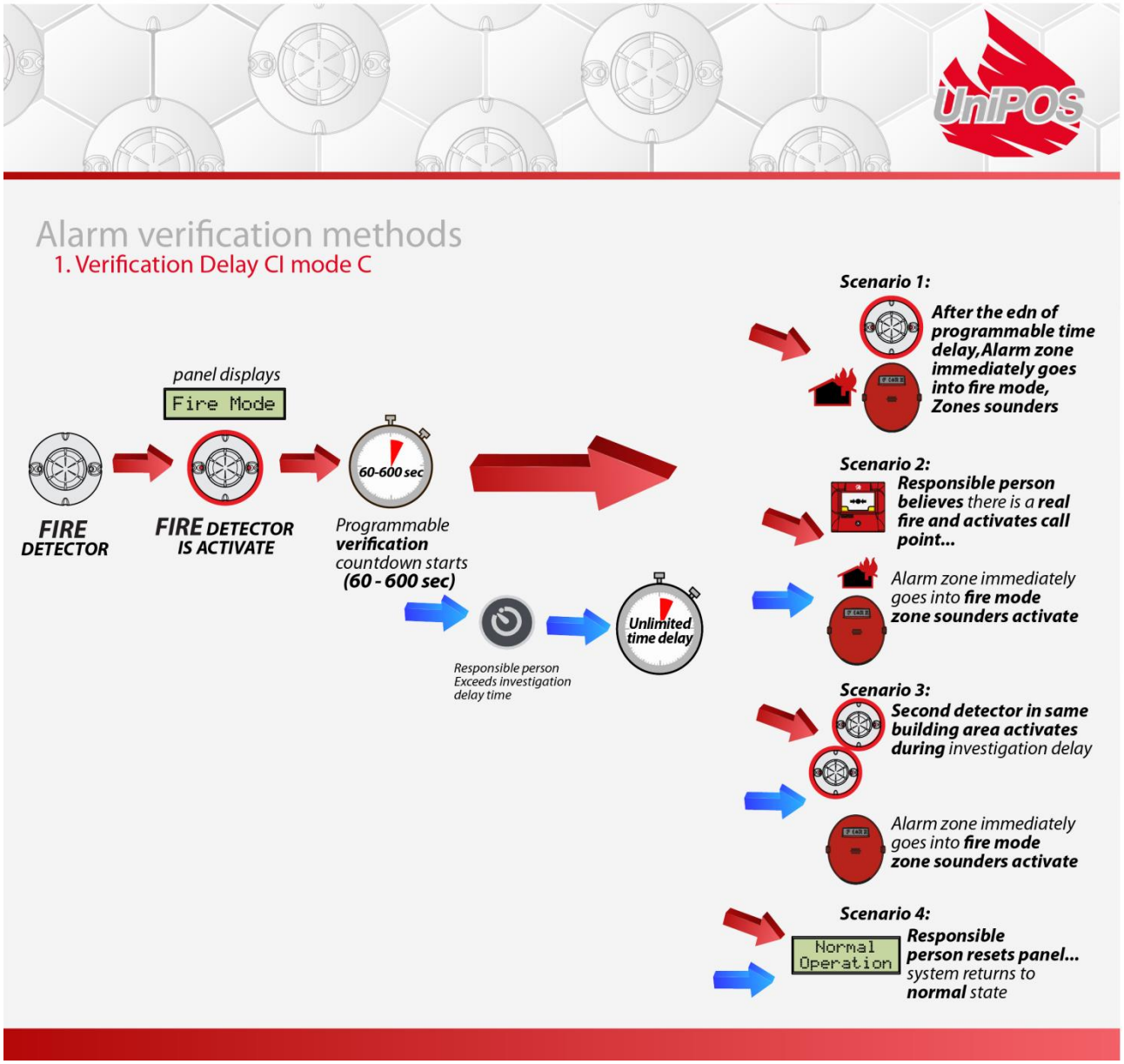

Coincidence mode C has the option to set the 0-600's sec. programmable time delay to unlimited. Fire alarm devices will be activated after end of fire -time delay (scenario 1), by operator's intervention (Scenario 2) or there is activation of another device (Scenario 3).
Information for configured delays can be acquired on access level 2 from **System → Config ->D-zones** (T=xxx) in seconds.

PC ONLY

```
10:11 DZ4 (M1-L1) (1)
 detection-zone 4
 AZ1 PZ0 CI:B(T=60) DZ4 DZ6
 LD 003 SmokeDetector
```

Configuration of all Dependency modes can be set up over configuration tool Win-UniConfig.

7. 7000M Operational modes

7.1 Normal operation

7.1.1 Description

The Fire Control Panel is in Normal Operation, when there are no any others active modes.

7.1.2 Indication

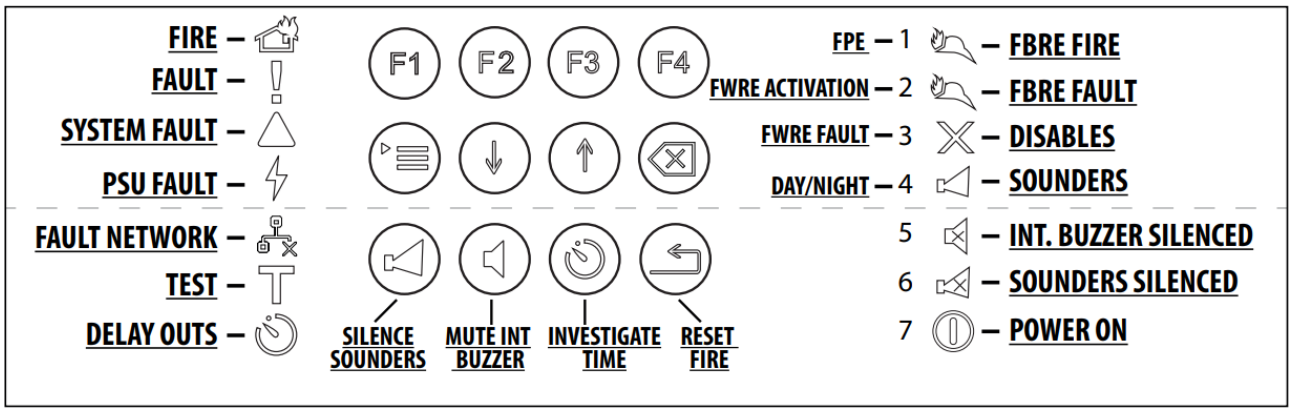

LED and Sound indication

In Condition Normal Operation are illuminated the green LED indicator "Power supply". If yellow LED indicator 4 is ON, "Day mode active" is set.

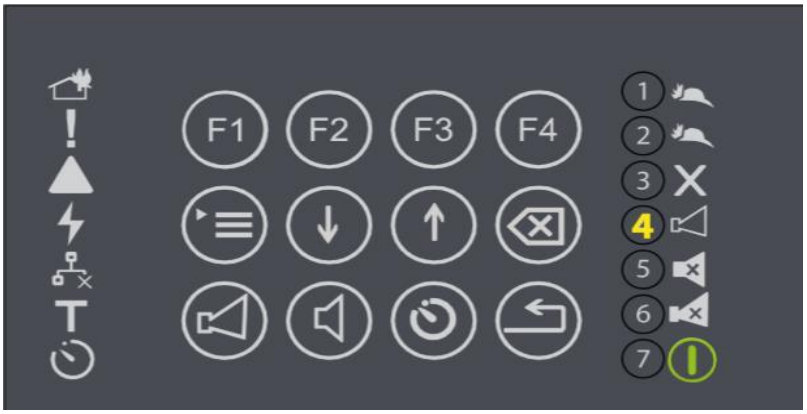

4 – Night mode/Standard mode activated (symbol is not illuminated)

4 – Day mode activated (symbol is illuminated in yellow)

Text indication

The display shows the following information:

```
        7000M Test Company
         7000M Test Site
        Normal Operation
Wed 01-01-19 11:12:00          Day
```

- **Name of the company** (sign can be changed by user by Configurator)
- **Name of the Site** (sign can be changed by user by Configurator)
- **Condition of the control panel**
- **Weekday**
- **Current date**
- **Real time**
- **Day / Night or Standard mode –** (programmable by Configurator)

Types of programmable sensitivity of detector at Day/Night or Standard mode:

- **Heat Detector Sensitivities** – *A2R; A2S*
- **Smoke Detector Sensitivities** – *Low; Medium; High*
- **Combine Detector Sensitivities**:
- **Smoke part** – *Low; Medium; High*
- **Heat part** – *A2R; A2S*
- **Sensor logic** – *only Heat; only Smoke; Heat or Smoke; Heat and Smoke.*

Standard mode: Fire detectors must be set with individual settings.

The only active button at this condition is (“Menu”). The button is accessible for all access levels. In Normal Operation the Fire Alarm Devices and Alarm zones can be forced to activate (Evacuation) by pressing twice button F1 at Access level 2. In this case the display shows text

“**Evacuation!!!**”
(For more information refer section 11)

Pressing button will stop it.

7.2 Fire mode

7.2.1 Description

The Fire Control Panel enters Fire condition mode upon activation of a fire detector, fire input, network panel fire event or script triggered. Exit from this mode is only through manual operation with ensured access level 2:

Step 1 – To reset Fire press reset button

7.2.2 Indication

LED and sound indication

In this condition are illuminated:

– With green light indicator: ("Power supply");

– With red light indicator: ("Fire condition");

– With red light the indicator of the relevant detection zone:

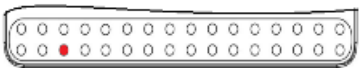

– Active FAD outputs can be suppressed by pressing button: ("Outputs"), the LED indicator is illuminated in continuous Yellow light ;

– Active panel Buzzer can be deactivated by pressing button:

("Buzzer"), the LED indicator is illuminated in continuous Yellow light

– Indication for activated Fire Brigade Routing Equipment (FBRE) output. Upon registering of fire event, output FBRE is activated regarding its timeout setting. Preset time for activation is with 30 second delay.
If monitored FBRE conf. input is configured, a confirmation signal from fire alarm routing equipment shall be received for a particular time. During this time is blinking until its confirmation over the input.

– Led 1 (activated FPE) is illuminated in case of activated Fire Protection Equipment , if configured. This led is general for all active FPE devices.
FPE activation confirmation input can be configured and shares same led with FPE- but in different illumination mode – if FPE Activation input is configured, activation to FPE is indicated with blinked led (activated FPE) until FPE equipment is not confirmed by FPE Activation input.

Text indication
In this condition on the display is visualized

```
11:12          [Fire Mode]       Zones:01
 01 Detection Zone - 259
    Smoke Detector - 6
F1:Points              F3:Activate Outputs
```

– **"01"** → number of Fire activation;
– **"Detection Zone – 259"** → number and user description name of the detection zone to which the activated detector belongs;
– **"Smoke Detector – 6"** → user description name and number of the fire detector;
–" **Zones:01"** – counter of zones in Fire;

7.2.3 Using keypad

Actions on using with buttons apply to all the areas, where the fire condition occurs.

Button	Access Level	Action	Additional Information
Button ("Outputs")	Access level 2	Deactivation of the outputs in case of Fire condition.	Operating with the button requires access level 2 LED indicator is illuminated if the condition suppressed outputs is active.

Button (“Buzzer”)	All	Silenced the panel buzzer.	LED indicator is illuminated if the condition switched off sounder is active. The local sounder is activated again: - upon entering Fire condition of the Control Panel from a new zone.
Button (“Inspection”)	All	Increase inspection time (time to outputs activation) with 60 seconds per press.	Extend delay time up to 600 sec. LED indicator is illuminated when there is active inspection time.
Button (“Menu”)	All	Enters condition Information and control menus.	
Button (“Reset”)	Access level 2	Forces the control panel to exit from Fire condition – clears all fires in all zones.	
Buttons (“Up” and “Down”)	All	If the fire conditions are more than one, information about each of them is displayed by means of the buttons.	
Button (“Exit”)	All	Leads to exit from the condition Information and control.	

7.3 Fault condition

7.3.1 Description

The Fire Control Panel enters „Fault Condition” upon detecting fault in one of the modules or/and in one of the devices, registered within the system;

7.3.2 Indication

LED and Sound indication

For all fault conditions indicator (“Fault”) is on with flashing yellow light. Depending on the type of fault condition, the following indicators are also illuminated:
– system fault – indicator (“System fault”) is on with continues yellow light;

– Fault of the mains power or back up batteries supply – indicator (“Fault Power supply”) is illuminated with continues yellow light;

– Fault of the network connection – (“Fault Networks”). Indicator is illuminated with continues yellow light;

– Fault of Mon. Output FBRE – Indicator is illuminated with flashing yellow light if signal from fire alarm routing equipment is not confirmed over FBRE conf. input or fault in FBRE monitored output is observed – short or open circuit.

– Fault in controllable output – (Fault Mon. Output Fire Alarm Device - FAD) Indicator is illuminated with flashing yellow light;

– Fault in fire protection equipment transmission path – (Fault Mon. Output Fire Protection Device – FPE) Indicator is illuminated with flashing yellow light;

– Fault in an of the fire devices, the indicator of the zone, to which it belongs and text message on the display;

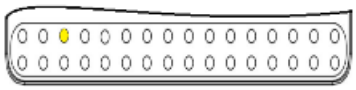

in flashing yellow light.

Text Indication

The screens of faults will suppress other messages except fire events. In the occurrence of more than one faults,
panel indicates them in separated flashing line. Use buttons ↓ ↑ to view the suppressed lines. Flashing lines means unconfirmed information, to confirm it press

button F1.
Upon registering of fault indication, output Fire Routing Warning Equipment (FWRE) is activated regarding its timeout setting. Preset time for activation is with 30 second delay
There is an illuminating flashing yellow indication 2 on the keypad.

```
11:12        [Fault Mode]        Total:02
 01 P-Manual Call Point-14
 02 Smoke Detector - 6
```

Press button “menu” over message “P-Smoke Detector -6”

```
11:12      [Fault Mode]      Total:02
 Type:Not responding
 L1 D1 DZ1:DZ-1
 Status:Not accepted
```

There is additional information: **L1** – Loop number; **D1** – Device position in the loop **DZ-1** – detection zone 1

7.3.3 Using keypad

Button	Access Level	Action	Additional information
Button (“Buzzer”)	All	Switch off the panel buzzer	
Buttons (“Up and Down”)	All	Display information about fault conditions, if more than one fault is registered.	
Button (“F1”)	Access level 2	Confirms the new panel events.	Every new event must be pointed with the cursor and confirmed with F1
Button (“Menu”)	All	Enters condition Information and control.	
Button * (“Reset”)	Access level 2	Clear the pointed restored fault.	*Note: There are some fault exceptions which cannot be recovered automatically. See 7.3.4 for **Error! Reference source not found.**more details.

7.3.4 Faults list

Not responding – check device; device loop connection
Contaminated chamber – dissemble detector and clean the chamber
Fault indicator – check device; device loop connection
ADC smoke error measured – disassembly the detector and clean the chamber
Power supply fault – No battery connected; battery fail; AC loss;
A-side short – Check loop cable-outputs connection, first and last loop detector connections.
B-side short – Check loop cable-outputs connection, first and last loop detector connections.
Open power wire – Check loop cable connections between displayed points.
- **Between unknown points –** Check loop device connections
- **Between points –** Check loop connections between displayed points.

Low battery – check/change batteries; check power supply output - 24 V.
Fault link to panel(s) – check panel's CAN connection; check status of the network panels.
Fault output – check Device output connection / load
Fault FAD output – check BIO/IO device Output connection and voltage
Fault FPE output – check BIO/IO device Output connection and voltage
Fault FBRE output – check BIO/IO device Output connection and voltage
Fault FWRE output – check BIO/IO device Output connection and voltage
Fault BIO output – check BIO device User Output connection and voltage
Fault Input check BIO/IO device Input connection
Fault Fire input – check BIO/IO device's Input connection
Fault FBRE input – check BIO/IO device's Input connection
Fault FWRE input – check BIO/IO device Input connection
Fault FPE-F input – check BIO/IO device's Input connection
Fault FPE-A input – check BIO/IO device's input connection
Fault BIO input – **c**heck BIO/IO device's Input connection
FBRE send not confirmed – Input "FBRE confirmed" has not activated by the preset time, check BIO device connection.
FWRE send not confirmed – Input "FWRE confirmed" has not activated by the preset time, check BIO device connection.
Fault FPE – check BIO/IO device's wire connection
LED board – Check LED Board cable connection.
Comm. Error – check RS 485 cable connection

Types of BIO faults:

- **short –** short circuit between BIO device connectors
- **open –** Open BIO device connectors
- **overload –** Overload BIO device Output

BIO device alerts:

- **Alert creep-short BIO device** – check BIO device's wires connection
- **Alert creep-open BIO device** – check BIO device's wires connection

PSU fault types:

- **Mains 220 V** – check connection to 220V, check FUSE 4A
- **Loss of battery charger** – this fault appears when battery charger fault is detected. Measure voltage on battery terminals.
- **User Out –** check user output connection for short circuit.
- **Battery Low** – check/change batteries, check power supply output 24 V
- **No Battery –** check battery; check battery connection
- **Battery Hot** – check/change batteries, check power supply output 24 V
- **Earth** – check Earth wire connection
- **Reset PSU** – restart panel

- **Comm. Error –** check PSU connection; restart panel

Module fault events:

- **Fault module comm. error –** check module DIN rail connection; restart panel
- **Fault module watchdog reset –** module reset by watchdog function
- **Fault module software reset –** module reset by software
- **Fault module mem. check fault –** memory fault; restart panel
- **Fault module general fault –** restart panel
- **Fault module 24 V –** restart panel;
- **Fault module 33 V –** restart panel;
- **Fault loop short detected –** check loop wire connection
- **Fault loop A-short appeared** – check loop wire connection side A
- **Fault loop B-short appeared** – check loop wire connection side B
- **Fault loop A-short power off –** check loop wire connection side A
- **Fault loop B-short power off –** check loop wire connection side B
- **Fault loop total-short power off** – loop detects appearing of short on both side. Check loop installation.
- **Fault loop short minus-ground power off** – check loop minus wire connection
- **Fault loop short plus-28 V power off –** connection between loop plus wire and 28V potential. Check wire connection of BIO devices to conventional sounders and another controllable device
- **Fault loop param. Degrade –** check loop device wire connection
- **Fault loop open plus –** check power wire;
- **Fault loop open minus** – check minus wire
- **Fault loop open both –** loop cable is interrupted on plus and minus wire

Device fault events:

- **Fault device missing –** check device present/connection.
- **Fault isolator on –** Check loop wire connection to the displayed device
- **Fault indicator –** check device; check device connection.
- **Fault dirty sensor** – disassembly the detector and clean the chamber
- **Fault input short –** check device 7203M input connection
- **Fault input open –** check device 7203M input connection
- **Fault output short** – check device 7203M output connection
- **Fault output open** – check device 7203M output connection
- **Fault power isolator –** check device connection
- **Fault measure error –** disassembly the detector and clean the chamber
- **Fault power supply –** Check external power supply missing

BIO device fault events

- **Fault short BIO device** – check BIO device wire connection
- **Fault open BIO device** – check BIO device wire connection
- **Fault overload BIO device** – check BIO device Load connected
- **Alert creep-short BIO device** – check BIO device wire connection

- **Alert creep-open BIO device** – check BIO device wire connection
- **FPE fault BIO device input** – check BIO device wire connection
- **External fault BIO device input –** check external device connection

SYSTEM FAULT – fault is indicated by separate light emitting indicator - "System Fault", light emitting indicator "General Fault" and active buzzer. "System Fault" will remain until action taken - restart of the panel at level access 3 - removed main and battery power supply. If after the restart "System Fault" remains - maintenance service is required.

8. Disable condition

8.1 Description

The Fire Control Panel enters Disable condition after manual operation of disabling an element of the Fire alarm system – fire detector, Fire Input, Fire Output or periphery or detection zone. Disabled element does not produce any signals for fire or fault until it re-enables.
Disabled components are kept unchanged in case of power reset of the panel.
Operations of check for disabling is in menu "Status → Disable"
Operations for disabling will be performed in menu "System → Disable" at access level 2.

8.2 Indication

LED and sound indication
In presence of disabled component, indicator is continuously on. The condition has no sound indication.
Text Indication
The entered disabled components can be reviewed from condition Status:
– Upon selecting "Status → Disable" the entered disabled components can be reviewed.

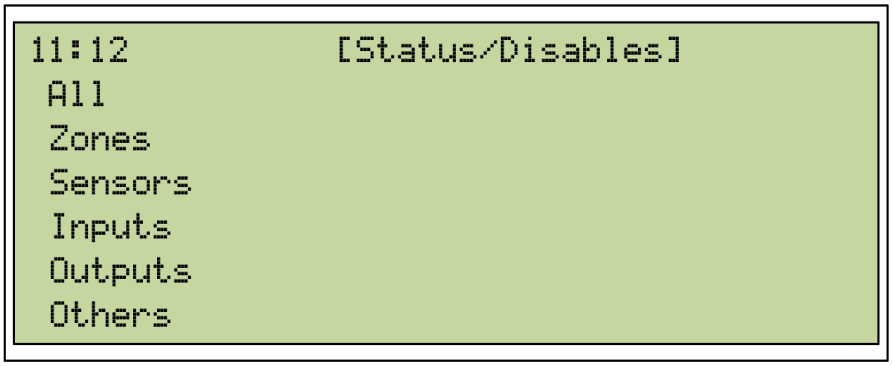

General information about the number of the disabled fire devices is provided in menus:

"**All**", "**Zones**", "**Sensors**", "**Inputs**", "**Outputs**" and "**Others**";

- Menu "**All**" – displays information for all disables;
- Menu "**Zones**"– displays information only for disabled zones;
- Menu "**Sensors**" – displays information only for disabled addressable fire detectors;
- Menu "**Inputs**" – display information only for disabled inputs (monitored inputs and addressable input devices);
- Menu "**Outputs**" – display information only for disabled outputs (monitored outputs and addressable output devices);
- Menu "**Others**" – display information only for disabled periphery as printer, repeaters.

```
11:12    [Status/Disables/All]  Disab.:01
 (257) Smoke Detector-2
```

"**(257)**" →Number of the detection zone
"**Smoke Detector – 2**" → User label of the Fire Detector
"**Disab.:01**" → Counter of the disablement

8.3 Disable Procedure

```
11:12 [Disable]
 Zone
 Sensors
 Intputs
 Outputs->
 Others
```

Select the element to disable, use the buttons to view all elements from the list menu. To select "Zone" press button if there is any disablement zone

```
11:12    [Disable/zones]    Disab.:00


F1:Enabled                  F3:Enable
```

```
11:12      [Disable/zones]      Disab.:00
 (257) Detection Zone-257
 (258) Detection Zone-258
F1:Disabled                     F3:Disable
```

will be visualized if there are none, press button F1 to get zone's list, to disable the selected zone use button F3. To return in the previous menu with the list of disabled devices press F1.

8.4 Using keypad

Button	Access Level	Action	Additional information
Button ("Menu")	All	Enters condition Information and control.	
Buttons ("Up and Down")	All	Display information about disabled zones, if more than one is registered.	
Button ("F1") F1	Access level 2	Displays zones list.	

Button ("F3") F3	Access level 2	Displays disabled zones list.	

9. Inhibit condition

9.1 Description

The Fire Control Panel enters Inhibition Mode after manual operation of Inhibit an element of the Fire alarm system – fire detector, Fire Input, Fire Output, periphery, or detection zone. The inhibited element does not produce signals for fire but still send signals for faults.
Status of all Inhibit components is kept unchanged in case of power reset of the panel.
Operations of check for disabling is in menu "Status → Inhibit"

```
11:12      [Inhibit/Zones]      Inhib.:00


F1:Allowed                       F3:Allow
```

Operations for Inhibit will be performed in menu "System → Inhibit" at access level2

9.2 Indication

LED and sound indication
In presence of inhibit component, indicator X is continuously on. The condition has no sound indication.
Text Indication
The entered inhibited components can be reviewed from condition "Status":
– Upon selecting "Status → Inhibit" the entered inhibited components can be reviewed.

```
11:12          [Status/Inhibit]
 All
 Zones
 Sensors
 Inputs
 Outputs
 Others
```

General information about the number of the Inhibit fire devices is provided in menus:
"**All**", "**Zones**", "**Sensors**", "**Inputs**", "**Outputs**" and "**Others**";

- Menu "**All**" – displays information for all inhibits;
- Menu "**Zones**"– displays information only for inhibited zones;
- Menu **"Sensors" –** displays information only for Inhibited addressable fire
- detectors;
- Menu "**Inputs**" – display information only for inhibited inputs (monitored inputs and addressable input devices);
- Menu "**Outputs**" – display information only for inhibited outputs (monitored outputs and addressable output devices);
- Menu "**Others**" – display information only for inhibited alarm or periphery zone

```
11:12    [Status/Inhibit/All]    Inhib:01
 (257) Smoke Detector-2
```

"**(257)**" →Number of the detection zone
"**Smoke Detector – 2**" → User label of the Fire Detector
"**Inhib.:01**" → Counter of the inhibited devices.

9.3 Inhibit Procedure

```
11:12 [Inhibit]
 Zone
 Sensors
 Intputs
 Outputs->
 Others
```

Select the element to inhibit, use the buttons to view all elements from the list menu. To select "Zone" press button if there is any inhibited zone

```
11:12      [Inhibit/Zones]      Inhib.:00
 (257) Detection Zone-257
 (258) Detection Zone-258
F1:Allowed                      F3:Allow
```

will be visualized, if there are none, press button F1 to get zone's list, to inhibit the selected zone use button F3. To return in the previous menu with the list of inhibited devices press F1.

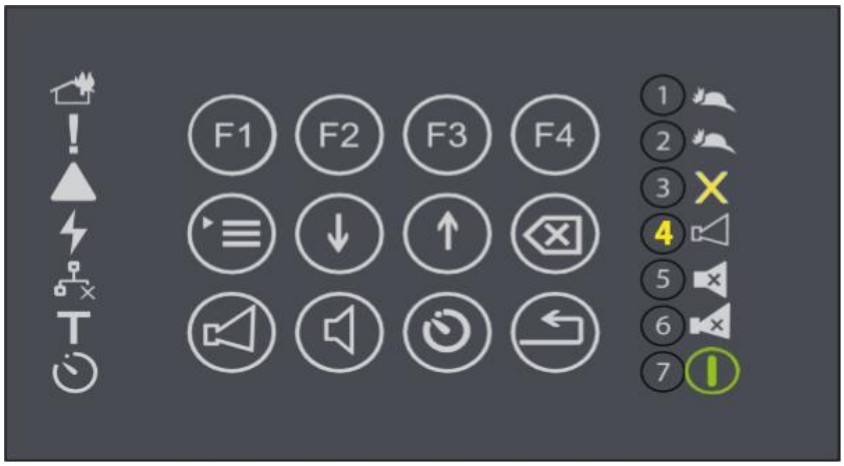

9.4 Using Keypad

Button	Access Level	Action	Additional information
Button (“Menu”)	All	Enters condition Information and control.	
Buttons (“Up and Down”)	All	Display information about inhibited zones, if more than one is registered.	
Button (“F1”) F1	Access level 2	Displays list of the zones.	

Button (“F3”) F3	Access level 2	Displays list of the inhibited zones.	

10. Test condition

10.1 Description

The Fire Control Panel enters “Test “condition by a specific zone after manual operation for setting up a zone in test. The condition can be made from control menu in access level 2.

```
11:12        [Status/Test]        T-zones:01
 257 Detection zone-257

F2:Test fires
```

10.2 Indication

LED and Sound indication

The condition has no sound indication. LED T and the led indicator of the corresponding zone at zone indication board in test are illuminated.

Text Indication

The entered devices in “Test” can be reviewed in menu “Status → Test”

```
11:12          [Status/Test]
 All
 Zone
 Walk
 Silent
```

General information about the number of the devices in Test is provided in menus: "**All**", "**Zone**", "**Walk**", "**Silent**".

- Menu "**All**" – displays information for all "Tests";
- Menu "**Zone**"– displays information for zones in "Test";
- Menu "**Walk**"– displays information for zones in "Walk Test";
- Menu "**Silent**"– display information for zones in "Silent Test";

10.3 Procedure of Test

Menu Test is located in menu **Service → Test** and contains: **"Zone"**;" Walk **Test"**, **"Silent-WT", "Outputs", "Indication",** "**LED**" and **"Printer".**

– **"Zone Test"** – set the selected zone in test – activated sensor activates zone sounder for 10 sec, there is Test indication on the LED board.

– "**Walk Test"** – set the selected zone in "Walk Test" - activated sensor activates Zone sounder for 10 sec, there are Test and Fire indication on the LED board.

– "**Silent-WT"** – set the selected zone in "Test"- activated sensor, activates Fire indication on the LED board.

– "**Output Test"** – Activates for 10 sec the selected Output;
– "**Indication Test"** – Activates BUI LEDs and Buzzer and zone indication board LEDs;
– "**Printer Test"** – Activates printer to print test message.
– **"Dev's LED"** – Activates device LED's or remote indicator if attached.

Use buttons to view all Test types in list menu. To select test type, point it with the cursor "Zone" and press button

```
11:12   [Service/Test/zones]   T-zone.:00
 (257) Detection Zone-257
 (258) Detection Zone-258
F1:TestZones   F2:Fast Scroll   F3:Start
```

Zone list is visualized, to select zone set in "Test" use button F3. To return in the previous menu with the list of detection zones presses F1.Pressing button will visualize the detection zones which are activated in Test condition.

```
11:12   [Service/Test/zones]   T-zone.:01
 (257) Detection Zone-257

F1:Detection zone  F2:Test-fires  F3:Stop
```

"257" → Number of the detection zone in "Test"
"Detection zone – 257" → User label of the Detection zone–257 in "Test"
"T-zones:01" → Counter of the zones in "Test"

T – test mode Activated
– detection zone in Test mode

10.4 Using keyboard

Buttons	Access Level	Action	Additional information
Button (“Menu”)	All	Enters into condition Information and control.	
Buttons (“Up and Down”)	All	Displays information about “Test” conditions, if more than one is registered.	
Button (“F1”) F1	Access level 2	Displays list of the devices in “Test” condition.	
Button (“F3”) F3	Access level 2	Displays the list of the devices in “Test”.	

11. Evacuation

11.1 Description

In „Normal Operation” by pressing twice button the Fire Alarm outputs (FAD) of the control panel and all Alarm zones, can be activated simultaneously **“Evacuation” level access 2 required.**

Pressing Button F1 will stop it.

12. Printer (optional)

12.1 Description

If printer module is included in the panel configuration, parameters are available in menu Status/Components/Other – Printer

```
10:11 [Status/Compon./Other]
 Printer
 LAN
 Fire counter
```

```
10:11 [Status/Compon./Other]
 EPM203A-HRS      0.14
 0xa0 No faults
```

Printer configuration menu: System/Setup/Printer

```
10:11 [Service/Setup]
 Time
 Printer
 Scripts
```

There are two printer settings:

```
10:11 [Service/Setup/Printer]
  *Print fire events
  *Print fault event
```

- **Print Fire Events** – if is selected (symbol "*" available) printer will print Fire events;
- **Print Fault Events** – if selected (symbol "*" available) printer will print Fault events;

13. Event log

In order to check events, go to menu System → Events. The menu provides information for all events up to 99 999, saved in energy independent memory of the fire control panel

The following events are registered in the control panel:

All – list of all events written in the panel memory

Fires – filtered from memory list of all fire events
Faults – filtered from memory list of all fault's events
Disablement – filtered from memory list of all disablement events
Inhibit – filtered from memory list of all inhibit events
Test – filtered from memory list of all test events

Menu **"All"** – containing all events.
By filtering the events are made the rest of the menus. Each of the menus containing only information for **Fires, Faults, Disablement, Inhibits, Tests.**

Menu **Log** – contain programmer information, history of starting and processing the programmer code.

Event logs can be deleted by operator on access level 3 ensured by password following menu **System→Setup→Archive** and selecting F1 **.**

14. Status

14.1 Fires – list of active fires

14.2 Faults – list of active faults

14.3 Disablement

– **All** – list of active lists of active disablement events

– **Zones** – list of active disablement zones

– **Sensors** – list of active disablement sensors

– **Inputs** – list of active disablement inputs

– **Outputs** – list of active disablement outputs

14.4 Inhibit

– **All** – list of active inhibit events

– **Zones** – list of active inhibit zones

– **Sensors** – list of active inhibit sensors

– **Inputs** – list of active inhibit inputs

– **Outputs** – list of active inhibit outputs

– **Others** –

14.5 Tests

– **All** – list of active tests

– **Zones** – list of active zones in test

– **Sensors** – list of active sensors in test

– **Inputs** – list of active inputs in test

– **Outputs** – list of active outputs in test

– **Others** –

14.6 Components

– **Loops** – Loop current; Plus - resistance; Minus loop resistance

– **Modules** –

– **Network** – status network connection

– **PSU** – PSU type /status; battery test

– **Other:**

– **Printer** – printer status and version
– **LAN –** IP configuration

– **Fire counter –** counter of passed fires

15. Menu Disable

```
11:12 [Disable]
 Zones
 Sensors
 Inputs
 Outputs ->
 Others
```

Zones – first screen shows list of already disabled zones (If there are any disabled).

```
11:22     [Disable/Zones]    Disab:00

F1:Enabled                   F3:Enable
```

By pressing F1 "Enabled" will display list of disabled zones with their user labels.

```
11:22     [Disable/Zones]    Disab:00
 001 Detection zone 1
F1:Disabled                  F3:Disable
```

Press F3 to disable the selected zone. Press F1 to see disabled zone list.

Sensors – First screen shows list Disabled Sensors (If there are any disabled).

```
11:12     [Disable/Sensors]    Disab.:00

F1:Enabled                     F3:Enable
```

By pressing F1 "Enabled" will display list of sensors with their user labels.

```
11:12     [Disable/Sensors]    Disab.:00
 (001) Floor 1 room 1
 (001) Floor 1 MCP
F1:Disabled                    F3:Disable
```

Press F3 to disable the selected sensor. Press F1 to see disabled sensor list.

Inputs - First screen shows list Disabled Inputs (If there are any disabled).

```
11:12     [Disable/Inputs]    Disab.:00

F1:Enabled                     F3:Enable
```

By pressing F1 "Enabled" will display list of Inputs with their user labels.

```
11:12      [Disable/Inputs]    Disab.:00
 (000) Floor 1 I\O
 (000) Floor 1 I\O 2
F1:Disabled                   F3:Disable
```

Press F3 to disable the selected Input. Press F1 to see disabled Input list.

Outputs

```
11:12 [Disable/Outputs]
 FAD
 FPE
 FBRE
 FWRE
 Others
```

FAD - list of disabled outputs programmed as FAD (If there are any disabled).

```
11:12   [Disable/Outputs/FAD]   Disab.:00


F1:Enabled                    F3:Enable
```

By pressing F1 "Enabled" will display list of FADs with their user labels.

```
11:12   [Disable/Outputs/FAD]   Disab.:00
 (001) Floor 1 sounder

F1:Disabled                   F3:Disable
```

Press F3 to disable the selected FAD. Press F1 to see disabled FAD list.

FPE – list of programmed outputs as FPE (If there are any disabled).

```
11:12   [Disable/Outputs/FPE]   Disab.:00


F1:Enabled                   F3:Disabled
```

By pressing F1 "Enabled" will display list of FPE with their user labels.

```
11:12   [Disable/Outputs/FPE]   Disab.:00
 (001) BIO Relay 1

F1:Disabled                     F3:Disable
```

Press F3 to disable the selected FPE. Press F1 to see disabled FPE list.

FBRE – list of programmed outputs as FBRE (If there are any disabled).

```
11:12  [Disable/Outputs/FBRE]   Disab.:00


F1:Enabled                      F3:Enable
```

By pressing F1 "Enabled" will display list of FBRE with their user labels.

```
11:12   [Disable/Outputs/FBRE]  Disab.:00
 (001) Monitoring output 1

F1:Disabled                     F3:Disable
```

Press F3 to disable the selected FBRE. Press F1 to see disabled FBRE list.
FWRE – list of programmed outputs as FWRE (If there are any disabled).

```
11:12  [Disable/Outputs/FWRE]   Disab.:00


F1:Enabled                      F3:Enable
```

By pressing F1 "Enabled" will display list of FWRE with their user labels.

```
11:12   [Disable/Outputs/FWRE]  Disab.:00
 (001) Monitoring output 1

F1:Disabled                     F3:Disable
```

Press F3 to disable the selected FWRE. Press F1 to see disabled FWRE list.
Others – list programmed device outputs (If there are any disabled).

By pressing F1 "Enabled" will display list of Outputs Others with their user labels.

```
11:12 [Disable/Outputs/Others] Disab.:00
 (000) Floor 1 I/O
 (000) Floor 1 I/O 2
 (000) BIO Relay 2
 (000) User Output 1
F1:Disabled                     F3:Disable
```

Press F3 to disable the selected Output. Press F1 to see disabled Outputs list.

Disable/ Others – list of already disabled devises showed as "Others". These are devices disabled by procedure "**F2**: Disabled Fault Indication" – two times reset the fault and then will be still active, gives an option by pressing **F2** to disable fault indication.

16. Menu Inhibit

```
11:12 [Inhibit]
 Zones
 Sensors
 Inputs
 Outputs ->
 Others
```

Zones – first screen shows list of already inhibited zones (If there are any inhibited).

```
11:12      [Inhibit/Zones]      Inhib.:00


F1:Allowed                       F3:Allow
```

By pressing F1 "Allowed" will display list of inhibited zones with their user labels.

```
11:12      [Inhibit/Zones]      Inhib.:00
 001 Detection-zone 1

F1:Inhibited                    F3:Inhibit
```

Press F3 to inhibit the selected zone. Press F1 to see inhibited zone list.
Sensors – First screen shows list inhibit Sensors (If there are any inhibited)

```
11:12     [Inhibit/Sensors]     Inhib.:00


F1:Allowed                       F3:Allow
```

By pressing F1 "Allowed" will display list of inhibited sensors with their user labels.

```
11:12     [Inhibit/Sensors]     Inhib.:00
 (001) Floor 1 room 1
 (001) Floor 1 MCP
F1:Inhibited                    F3:Inhibit
```

Press F3 to inhibit the selected sensor. Press F1 to see inhibited sensors list.

Inputs – First screen shows list inhibited Inputs (If there are any inhibited)

```
11:12      [Inhibit/Inputs]      Inhib.:00


F1:Allowed                        F3:Allow
```

By pressing F1 "Allowed" will display list of Inputs with their user labels.

```
11:12      [Inhibit/Inputs]      Inhib.:00
 (001) Floor 1 I\O
 (001) Floor 1 I\O 2
F1:Inhibited                     F3:Inhibit
```

Press F3 to Inhibit the selected Input. Press F1 to see inhibited Input list.

Outputs

```
11:12 [Inhibit/Outputs]
 FAD
 FPE
 FBRE
 FWRE
 Other
```

FAD – list of Inhibited outputs programmed as FAD (If there are any inhibited)

```
11:12   [Inhibit/Outputs/FAD]   Inhib.:00


F1:Allowed                        F3:Allow
```

By pressing F1 "Allowed" will display list of FADs with their user labels.

```
11:12   [Inhibit/Outputs/FAD]   Inhib.:00
 (001) Floor 1 sounder

F1:Inhibited                    F3:Inhibit
```

Press F3 to inhibit the selected FAD. Press F1 to see inhibited FAD list.

FPE – list of inhibited outputs programmed as FPE (If there are any inhibited)

```
11:12   [Inhibit/Outputs/FPE]   Inhib.:00

F1:Allowed                      F3:Allow
```

By pressing F1 "Allowed" will display list of FPE with their user labels.

```
11:12   [Inhibit/Outputs/FPE]   Inhib.:00
 (001) BIO Relay 1

F1:Inhibited                    F3:Inhibit
```

Press F3 to inhibit the selected FPE. Press F1 to see inhibited FPE list.

FBRE – list of inhibited outputs programmed as FBRE (If there are any inhibited)

```
11:12 [Изолир./Изходи/FBRE] Изолир.:00

F1:Allowed                      F3:Allow
```

By pressing F1 "Allowed" will display list of FBRE with their user labels.

```
11:12   [Inhibit/Outputs/FBRE]  Inhib.:00
 (000) Monitoring output 1

F1:Inhibited                    F3:Inhibit
```

Press F3 to inhibit the selected FBRE. Press F1 to see inhibited FBRE list.

FWRE – list of inhibited outputs programmed as FWRE (If there are any inhibited)

```
11:12   [Inhibit/Outputs/FWRE]  Inhib.:00


F1:Allowed                       F3:Allow
```

By pressing F1 "Allowed" will display list of FWRE with their user labels.

```
11:12   [Inhibit/Outputs/FWRE]  Inhib.:00
 (000) Monitoring output 2

F1:Inhibited                    F3:Inhibit
```

Press F3 to inhibit the selected FWRE. Press F1 to see inhibited FWRE list.
Others – list of devises programmed as Outputs (If there are any inhibited)

```
11:12 [Inhibit/Outputs/Others]  Inhib.:00


F1:Allowed                       F3:Allow
```

By pressing F1 "Allowed" will display list of Outputs Others with their user labels.

```
11:12 [Inhibit/Outputs/Others] Disab.:00
 (000) Floor 1 I/O
 (000) Floor 1 I/O 2
 (000) BIO Relay 2
 (000) User Output 1
F1:Inhibited                    F3:Inhibit
```

Press F3 to Inhibit the selected Output. Press F1 to see inhibited Outputs list.

Inhibit/Others – all inhibited devices by Modbus monitoring will be displayed in this menu

17. Menu System

```
11:12 [System]
 Config ->
 Events ->
 Language ->
 Setup ->
 Stop ->
 USB-Copy ->
 Information
```

Configuration

```
11:12 [System/Config.]
 Loops
 D-zones
 A-zones
 P-zones
 BIO
```

Loops – list of loops and with their list of devices.

```
11:12 [System/Config./Loops]
 L02 7000M Loop-2
```

Example: Select loop 2
'7000M Loop-2' – user label of loop contour 2
'DZ-001' – number of Detection Zones in loop contour 2
'AZ-001' – number of Alarm Zones in loop contour 2

'PZ-001' – number of Protection Zones in loop contour 2

By arrows all devices connected in Loop contour 2 can be seen

LD 001 Smoke Detector – '**LD'** loop Device **'001'** position in loop
Floor 1 room 1 – user label of Smoke Detector

A-zones – list of A-zones and their attached sounder devices and sensors which are configured in D-zones, which are in sub related to selected A-zone. Visualized with their user labels.

```
11:12 [System/Config./A-zones]
 AZ 001 Alarm-zone 1
```

```
11:12 AZ1 (M1-L2 T=60) (2)
 Alarm Zone-1
 DZ 001
 AZ
 LD 009 Sounder Device
 Floor 1 Sounder
```

Second menu gives detailed information about parameters of Alarm zone.

– M1– L2 T=60 - loop controller module 1; Loop contour 2; Time delay –60 sec

– DZ 001 – Alarm zone 1 is being activated by Detection zone 1

– LD 009 Sounder Device – Alarm zone 1 has Sounder Device 009 attached with user label “Floor 1 Sounder”.

D-zones – list of D-zones and their Attached sensors (fire detectors, manual call points, I/O -BIO inputs)

```
11:12 [System/Config./D-zones]
 DZ 001 Detection-zone 1
```

```
11:12 DZ001 (M1-L1) (11)
 detection-zone 1
AZ1 PZ1 CI:-
LD 001 Smoke Detector
Floor 1 room 1
LD 003 ManualCallPoint
Floor 1
LD 005 SmokeDetektor
Floor 1 room 2
```

P-zones – list of P zones and their attached outputs (I/O – BIO outputs) and sensors which are configured in D zones, which are in sub related to selected P-zone.

```
11:12 [System/Config./P-zones]
 DZ 001 Detection-zone 1
```

```
11:12 PZ1 (M2-L0 T=60) (1)
 Protection -Zone-1
 DZ 001
 BD1 RelayOutput
 BIO Relay 1
```

Example: PZ1 (M2 – L0 T=60) – Loop Controller Module 2 Loop 2 Time-Delay –60 sec.
Protection-zone 1 – is user label (configuration by WinUniConfig tool)
DZ 001 – Activation zone (configuration by WinUniConfig tool)
BD1 Relay Output – Activated device (configuration by WinUniConfig tool)
BIO Relay 1 – User label of activated device (configuration by WinUniConfig tool)

BIO – list and configuration of BIO devices.
M2 (7) – Module 2
BIO 1 – (first module is the Loop Controller) – user label

```
11:12 M2 (7)
 BIO 1
BD1 FPE PZ1 RelayOutput
 BIO Relay 2
BD2 CommonOutput RelayOutput
 Monitoring Output 1
BD3 FBRE MonitoredOutput
 Monitoring Output 2
BD4 FWRE MonitoredOutput
   Monitoring Input 1
BD5 FBREConfirm MonitoredInput
   Monitoring Input 2
BD6 FWREConfirm MonitoredInput
   User Output 1
BD7 CommonOutput UserOutput
```

First line – BIO 1 – Device Label
BIO device 1 (BD1) (relay output 1) is user configured by WinUniConfig as Fire protection Equipment in Protection Zone
Second Line – BIO device configuration
BIO device 2 – (Relay output 2) is user configured by WinUniConfig as Common Output
BIO device 3 – (Monitoring Output 1) is user configured by WinUniConfig as Fire Brigade Routing Equipment
BIO device 4 – (Monitoring Output 2) is user configured by WinUniConfig as Fault Warning Routing Equipment
BIO device 5 – (Monitoring Input 1) is user configured by WinUniConfig as Fire Brigade Routing Equipment Confirmation
BIO device 6 – (Monitoring Input 2) is user configured by WinUniConfig as Fault Warning Routing Equipment Confirmation
BIO device 7 – **(User Output) is user configured by WinUniConfig as Common Output.**

Events

All – list of all events
Fires – list of all fires
Faults – list of all faults
Disablement – list of all disablement
Inhibits – list of all inhibits
Tests – list of all tests

```
11:12 [System/Events]
 All
 Fires
 Faults
 Disablem.
 Inhibits
 Tests
 Logs
```

Language – control panel came pre-configured: English, and/or Bulgarian

```
11:12 [System/Language]
 English
```

SETUP

```
11:12 [System/Setup]
 Time
 Printer
 Scripts
```

Time – set up of time and date, the presence of LAN connection date and time are set up automatically.

```
11:12 [System/Setup/Time]
 10:11:00  01-04-2020

F1:Increment     F2:Decrement     F3:Set
```

Printer – printer has two options to set – print fires and/or print faults

```
11:11 [System/Setup/Printer]
 *Print fire events
 *Print fault events
```

By Menu button the print evets are configured.

Scripts – list of already created scripts

```
11:11 [System/Setup/Scripts]
 001 Script Elevator

F1:Disable                    F3:Enable
```

Press F1 to disable script execution or F3 to enable script execution.

STOP

```
11:12 [System/Stop]
 Panel
```

Panel – recommended procedure of panel restart, password verification, then press F1 to confirm panel restart.

```
10:11 [System/Stop]


          F1 to confirm Stop
```

USB COPY

```
10:11 [System/USB-Copy]
 Events
 Logs
 Addr.conf
 Backup
 Update
 Eject USB
 Cleanup
```

Events – gives access to event.log and eveng.log

```
11:12 [System/USB-copy/Events]
 eveng.log*
 event.log*
                F1 to copy
```

Logs – the menu is password protected default pass F1F1F2F2 and give access to software logs which are for UniPOS use only.

```
11:12 [System/USB-copy/Logs]
 7000M.log*
 Daemon.log*
                F1 to copy
```

Addressing Configuration – save to USB drive already configured 7000M-p-1-full-system-Auto.xml and 7000M-p-1-m-1-loop-2-AUTO.xml

```
11:12 [System/USB-copy/Addr.conf]
 7000M-p-full-sysrm-AUTO.xml
 7000M-p-m-1-loop-2-AUTO.xml
                F1 to copy
```

Backup – back up of configuration files as: 7000M-full-system.xml, 7000M.sh etc.

```
11:12 [System/USB-copy/Backup]
 bapp
 rs-sockets
 7000M.sh
 System7000M-en.xsd
 bui-data-en.bin
 7000M-full-sysrem.xml
                F1 to copy
```

Back up can be made on USB flash drive after valid password entered – default pass: F1F1F2F2, then select the files which are needed to be back up and press F1 to copy.
Update – update system files from an USB drive: 7000M-full-system.xml, 7000M.sh

```
11:12 [System/USB-copy/Update]
 bapp
 rs-sockets
 7000M.sh
 System7000M-en.xsd
 bui-data-en.bin
 7000M-full-sysrem.xml
                F1 to copy
```

New update versions of software files or new configuration file can be placed into the panel by this menu. The menu is password protected, default pass: F1F1F2F2.

Eject USB – safely removed of USB flash drive – default pass: F1F1F2F2.

```
11:12 [System/USB-copy/EjectUSB]


               F1 to Eject
```

Cleanup – ability to clean files from the panel's flash memory – default pass: F1F1F2F2.

```
10:11  [System/USB-copy/Cleanup]


            F1 to Cleanup
```

Example: In case of wrong name file as: 7000M-full-system**100**.xml, this configuration file will not be in operation and by this menu will be deleted from the panel's file system.
Information – this menu contains the system's software and hardware information.

```
11:12 [System/Information]
 UniPOS 7000M (c) Fire Alarm System
 SW: ver.1.0 8 2021 09:44:43
 XML Schema: ver.1.0
```

18. Menu Services

```
11:12 [Service]
 Test->
 Calibration->
 Schedule->
 Startup->
 Shutdown->
 Addressing->
 Remote-Access->
```

Test

```
11:12 [Service/Test]
 Zone
 Walktest
 Silent-WT
 Outputs
 Indication
 Printer
 Devs-LED
```

Zones

```
11:12 [Service/Test/Zones]      T-Zone:00
 001 Detection-Zone 1
 002 Detection-Zone 2
F1:Test-zones  F2:Fast Scroll   F3:Start
```

Select from the Detection zone's list the zone and press F3 to send selected zone in Zone test mode.
Activating any fire detector or manual call point. Same valid for Walk test and Silent walk-test fire detectors which belongs to Detection zone will activate adjacent Alarm zone and their sounders for 10 seconds. – valid for Walk test as well.
LED boards will show the selected Detection zone in yellow.

Walk test

```
11:12 [Service/Test/Walktest]   T-Zone:00
 001 Detection-Zone 1
 002 Detection-Zone 2
F1:Test-zones  F2:Fast Scroll   F3:Start
```

Select from the Detection zone's list the zone and press F3 to send selected zone in Zone test mode. **F2** will scroll with 10 lines down.
LED boards will show the selected Detection zone in yellow. Activating the fire detectors which belongs to this Detection zone will activate in red the Detection zone on the LED board. Detection zone will activate adjacent Alarm zone and their sounders for 10 seconds.

Silent Walk - test

```
11:12 [Service/Test/Silent-WT]  T-Zone:00
 001 Detection-Zone 1
 002 Detection-Zone 2
F1:Test-zones  F2:Fast Scroll   F3:Start
```

Select from the Detection zone's list the zone and press F3 to send selected zone in Zone test mode.
LED boards will show the selected Detection zone in yellow. Activating the fire detectors which belong to this Detection zone will activate in red the Detection zone on the LED board.

Outputs

```
11:12 [Service/Test/Outputs]
 L02 D002 Floor 1
 L02 D004 Floor 1
 L02 D009 Floor 1 Sounder
```

Selected Output as Sounder Device or I/O output will be activated for 10 sec.
Please note: that any executable devices different than sounders shall be monitored or disconnected from I/O terminals during Output tests.

Indication

```
11:12 [Service/Test/Indication]

       BUI-Test--fire sound alarm
```

All panel LED indication will be activated for a few seconds including panel buzzer.

Fast test – double press BUI button F3 (requires no active faults)

Printer

```
11:12  [Service/Test/Printer]

       F1: for Printer test
```

Press button F1 for printer test.

Devises - LED test

```
11:12 [Service/Test/devs-LED]
 L01 7000M loop 1
 L02 7000M loop 2
```

Select loop from the list and press button 'Menu'.

```
11:12 [Service/Test/devs-LED]
 L1 D001 Combine Detector - 1
 L1 D002 Heat Detector - 2
 L1 D003 Smoke Detector - 3
```

Select device from the list press button 'Menu' and the device's LED and remote indicator (if connected) will be activated.

Calibration – Displays non calibrated BIO devices monitoring outputs

```
11:12 [Service/Calibration/BIO]
 Calibrate BIO 2 output 3
 Calibrate BIO 2 output 4
```

Select non-calibrate BIO device and press 'Menu' button – it will start automatic calibration procedure.
Note: BIO output terminal and cable connections shall be checked before executing calibration procedure.

Schedule

```
11:12 [Service/Schedule/Day-Night]
 Day mode
 Night mode
*Auto mode
```

Symbol "*" indicates active or selected Day-Night mode.

– day mode – if day mode is selected by pressing of button “Menu”, day settings are activated to all fire detectors, until operator activate other option in this menu.

– night mode - if night mode is selected by pressing of button “Menu”, night settings are activated to all fire detectors, until operator activate other option in this menu

– auto mode - auto mode is default selected when it uses xml configuration. Day and night settings will be changed by schedule configured in xml file.

Start-up

```
11:12 [Service/Startup]
 Start All
 Modules
 Loops
```

Start All – Already stopped modules can be started by this menu ALL.
Symbol "=" means start procedure is successful.
Symbol "#" means start procedure failed.
Symbol "**!**" means there is no connection with the device.

```
11:12 [Service/Startup/Start all]
 =01 Loop Controller Module 1
 =02 BIO 1
```

Example: Loop Controller Module 2 and BIO Module are started successfully.

Module – menu shows list of modules on a DIN rail, if they are stopped are with symbol "*" press F1 to start selected. Menu is password protected default pass: F1F1F2F2.

```
11:12 [Service/Startup/Module]
 *01 Loop Controller Module 1
 *02 BIO 1
              F1:Enter duty
```

Example: 01 Loop controller module 1 – first module on a DIN rail
02 BIO 1 – Device label of second module on a DIN rail

Loop – menu displays list of loops connected on a DIN rail if they are stopped are with symbol "*" press F1 to start selected. Menu is password protected default pass: F1F1F2F2.

Shutdown

```
11:12 [Service/Shutdown]
 Shutdown All
 Modules
 Loops
```

Shutdown all – a list with modules connected on a DIN rail

```
11:12 [Service/Shutdown/Shutdown All]
 *02 7000M Loop-2
 *02 I/O Module-2
```

Selecting menu "shutdown all" will stop all modules on a DIN rail except Base controller module.
Symbol "*"– means shutdown operation completed, modules are shutdown
Module – by menu Modules an option to choose and stop an individual module from the list. To stop press button 'Menu'

```
11:12 [Service/Addressing/LC Modules]
 01 Loop Module-1

              F1:Save config
```

Symbol **"*"** – means shutdown operation completed, selected module is shutdown

Note: Loop Controller Module has two loops – Loop 1 and Loop 2.

Loops – displays list of loops used - an option to choose and stop an individual loop from the list. To stop press button 'Menu'.

```
11:12 [Service/Shutdown/Loops]
 *02 7000M Loop-2
```

Symbol “*” – loop is shutdown.
Addressing – by this menu all connected Loop Modules with their loops can be addressed by the fire panel.

All Loops – this menu displays a list of all loops available

```
11:12 [Service/Addressing]
 All Loops
 LC Modules
 Loops
```

For example, **loop 2** is addressing – this is automatically operation done by the fire panel, when it's completed shows the total number of the addressed loop devices. (ex. 210 pcs.)

```
11:12 [Service/Addressing/All Loops]
 +02 (210) 7000M Loop-2
```

To save system configuration press F1 .

Symbol “+” - operation of saving configuration is completed.

LC modules – Second option at menu “Addressing” displayed the list of LC modules connected on a DIN rail. With this menu can choose individual LC module and addressed its loops.

```
11:12 [Service/Addressing/LC Modules]
 01 Loop Module-1

              F1:Save config
```

Example: Operation of addressing will be only for new modules.

Loop Controller Module has two loops – "**Loop 1" and "Loop 2".**

Example: Two Loop Controller Modules will have four loops, they will be numerous as:
01 7000M Loop 1
02 7000M Loop 2
03 7000M Loop 1
04 7000M Loop 2
'01-04' – device number
'7000M Loop' – device label

Generate configuration – already saved configuration information need to be pre-configure in xml file by pressing button F1 – finalization of operation is displayed with **"Config generate success"**
If the addressing option 'All loops' has been selected there is no need to go to menu Gen. Config it's generates automatically.

```
11:12 [Service/Addressing]
 LC Modules
 Loops
 Gen.config
```

```
11:12 [Service/Addressing/Gen.config]


              F1:Save config
```

```
11:12 [Service/Addressing/Gen.config]


        Config generate success!
```

Remote - Access – when is chosen option "Connect" show list of panels connected in CAN network, Select the panel which you need to connect and press "Menu" button

```
11:13 [Service/Remote-Acces]
 Connect
 Disconnect
```

```
11:12 [Service/Remote-Acces/Connect]
 Panel-01
```

Menu is protected by default pass: F1F1F2F2. All panels in the network will be displayed. Press button “Menu” to connect to the selected panel.

```
11:12 [Service/Remote-Acces/Connect]
 Panel-01 Connected
```

After success connection press “Reset” button, present panel is become Panel 1.

```
            7000M Test Company
           (*1) 7000M Test Site
             Normal Operation
Wed 01-01-19 11:22:00                Day
```

(***1**) – Remote Access to Panel 1 – there is full operation access to Panel 1.
To disconnect go to menu “Remote Access” and select “Disconnect”

19. Menu Messages

In this menu can be displayed messages from technical inputs /general purpose inputs/

```
11:13      [Info Massages]      Total:02
01 Noncalibrated BIO 2 output 3
02 Noncalibrated BIO 2 output 4
               F3:Confirm
```

Example:
Non-calibrated BIO outputs or activated I/O or BIO inputs are shown in Messages

Message is blinking when it isn't confirmed, to confirm select and press button F3.

20. Menu Print

Current –This menu allows operator to print status of the panel/system -Fire, Faults etc.

```
11:12 [Print]
 Current->
 Status-Devs->
 Status-loop->
 Events-Archive->
```

Fires/Faults/Disabl./Tests

```
11:12 [Print/Current]
 Fires
 Faults
 Disabl.
 Tests
```

If **'Fire'** selected will print current report of:
"Detection zones in fire – 0
Points in fire – 0
Alarm zones active – 0
Protection zones active – 0
Alarm zones suppressed – 0
Protection zone suppressed – 0
Alarm zones delayed – 0
Protection zone delayed – 0"
If **'Faults'** selected will print current report of:

"Fault items 0"
(If there is an item if Fault will be printed with detail information about the item and type of the Fault)
If **'Disablement'** is selected, we will print current report of:

"Disabled items 0
Inhibited items 0"
Both current 'Disabled' and 'Inhibited' items will be printed.

If **'Tests'** selected will print current report of:
"Detection zone in test – 0
Alarm zones in test – 0"
Status-devs
D-zones/A-zones/P-zones/BIO devices

```
11:12 [Print/Status-devs]
 D-zones
 A-zones
 P-zones
 BIO
```

Select the type of the device.

```
11:12 [Print/Status-devs/A-zones]
 Alarm zone 1
 Alarm zone 2
F1:Next          F2:Prev          F3:Print
```

By buttons F1 and **F2** select the Alarm/Detection/Protection zone and print their status by button F3. Selecting BIO module will print status of all BIO devices.

Status – loop

Select type of devices.

```
11:12 [Print/Status-loop]
 All
 Sensors
 Sounders
 Outputs
 Inputs
```

Then select the loop from the loop's list and press F3 to print. In this example all

```
11:12 [Print/Status-loop/Sensors]
 001 7000M loop 1
 002 7000M loop 2
F1:Next          F2:rev          F3:Print
```

sensors status in loop 1 will be printed.

Events–archive

All/Fires/Faults/Disables/Tests

```
11:12 [Print/Events-archive]
 All
 Fires
 Faults
 Disables
 Tests
```

Select event to print from the event list.

```
11:12 [Print/Events-archive/Fires]
 01-01-2020 <=> 01-02-2020

F1:Next          F2:Prev          F3:Print
```

By buttons F1 and F2 set the event (example Fire) time period and print it by pressing button F3.
If the option “All” selected will print all events from the selected time-period.

21. Pre-installation

21.1 Location

The Fire Alarm Control Panel or Operator Panel must be in, or nearby, the entrance according to local regulations and in consultation with the fire brigade.

Environmental Requirements

The equipment complies with environmental conditions of EN 60721-3-3:1995, class 3k5 (refer to EN 54-2, chapter 12.1.6).

Operation temperature:	-5° to +40°C
Storage temperature:	+5° to +35°C
Transportation temperature:	-10° to +50°C

Humidity
storage – up to 80%
operational – up to 93%

Cabinet size 419x204x520mm

Transportation:

The CIE shall be transported by vehicle, in factory packaging, in the above stated environmental conditions and at sinusoidal vibrations with acceleration amplitude not more than 4,9m/s 2 in frequency range 10 to 150Hz.

Degree of protection: IP30

21.2 Warranty

The manufacturer guarantees compliance of the unit with EN 54-2: 1997/ A1:2006/AC: 2009, EN 54- 4:1997/A2: 2006/AC 2009. The warrant period is 24 months from the date of the purchase, providing that - the conditions of storage and transportation have been observed; - the startup has been done by authorized personnel only; - the requirements for operation stated herein have been observed.

21.3 Mounting Height / Space Requirement for Control Panel

To ensure optimal readability of the Fire Alarm Control Panel's display, the recommended mounting height of this cabinet top is approximately 175(150) cm above the floor. Other panels should be mounted accordingly.

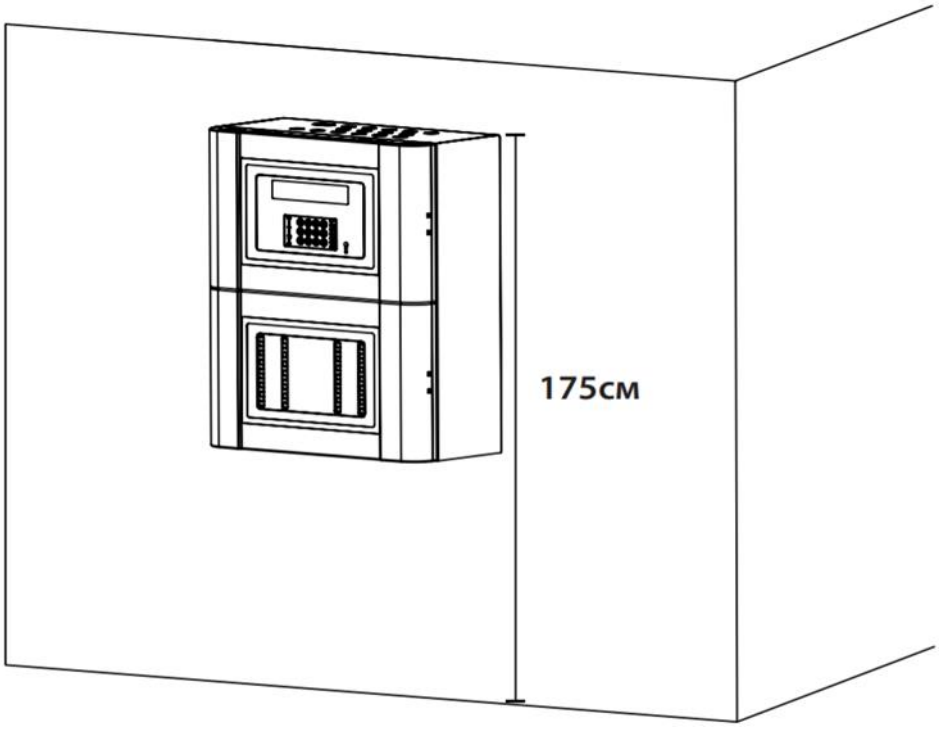

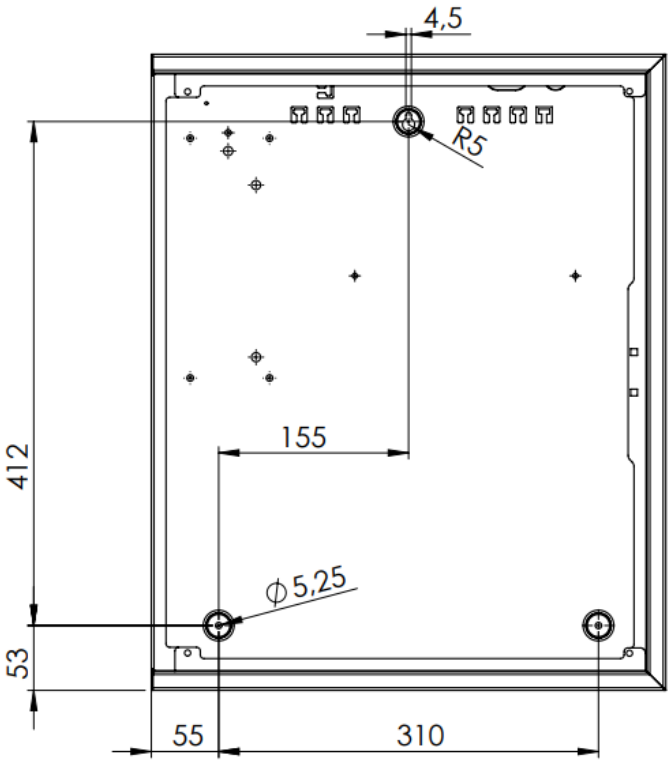

Mounting Fire Alarm Control Panel 7000M

Depending on the type of wall, please use suitable fasteners with a minimum load capacity of 140N each. Distribute the load on each of the fasteners evenly.

- Mark and drill the 3 holes according to the following scheme

- Partly fasten the upper screw
- Hang the cabinet onto the upper screw
- Partly fasten the bottom screws
- Tighten all screws

Accessing DIN rail module inside the Control Panel

1. Use screwdriver to unscrew hood screws and open both hoods.
2. Find openings side of the panel
3. Unscrew both screws and open the metal hood gives access to DIN modules and power supply unit.

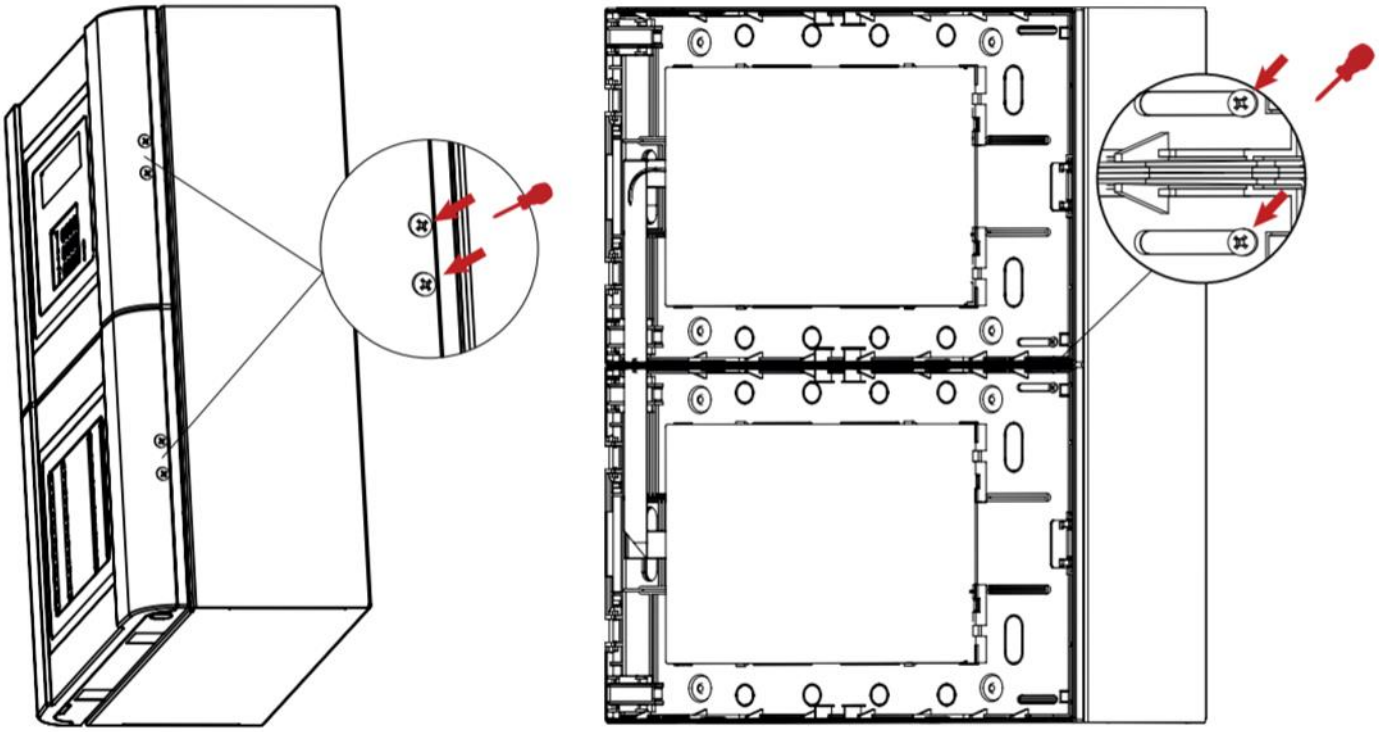

21.4 Power Supply Unit (PSU)

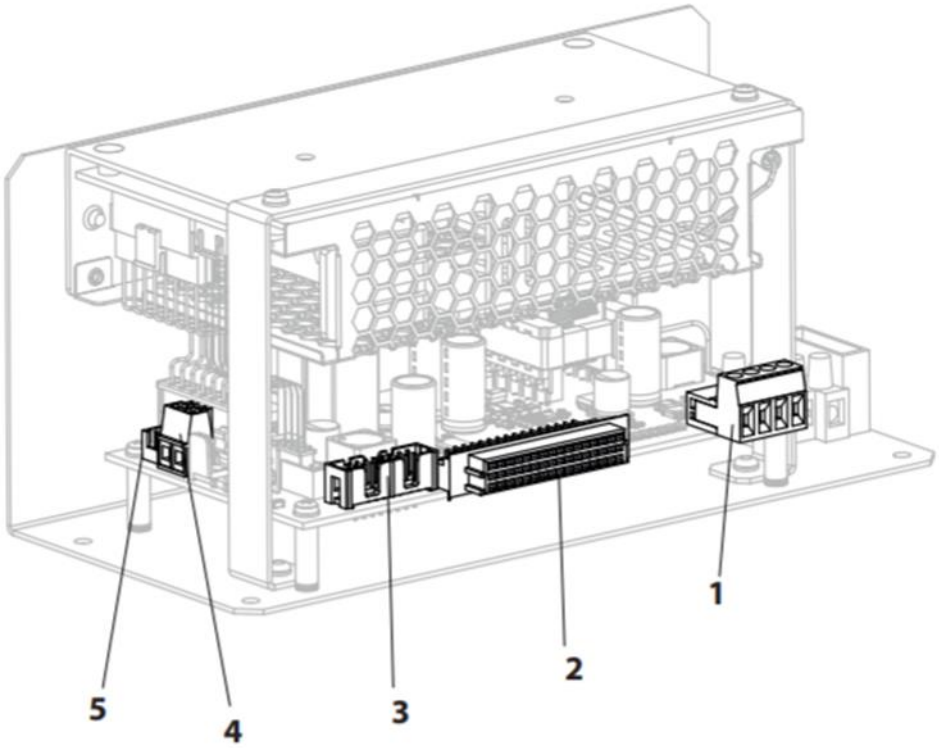

1 – Two user Outputs 27.6VDC/0.7A – permanently supplied – used for power supply of repeaters and extended zonal indications
2 – DIN rail connector
3 – BUI power-communication cable
4 – Battery connector
5 – Battery Temperature sensor

There is an information sticker on the top of the PSU.

21.5 Battery installation

The panel requires two 12V batteries for standby operation.
OBSERVE THE POLARITY OF CONNECTIONS!

Place the batteries in the bottom of the enclosure and connect the 'Red' lead to the positive (+)
terminal of battery #1 and the 'Black' lead to the negative (-) terminal of battery #2.
Connect the negative of battery #1 to the positive of battery #2 using the supplied link cable.
Ensure that the battery terminals do not short out against any part of the enclosure, circuit board or chassis plate.

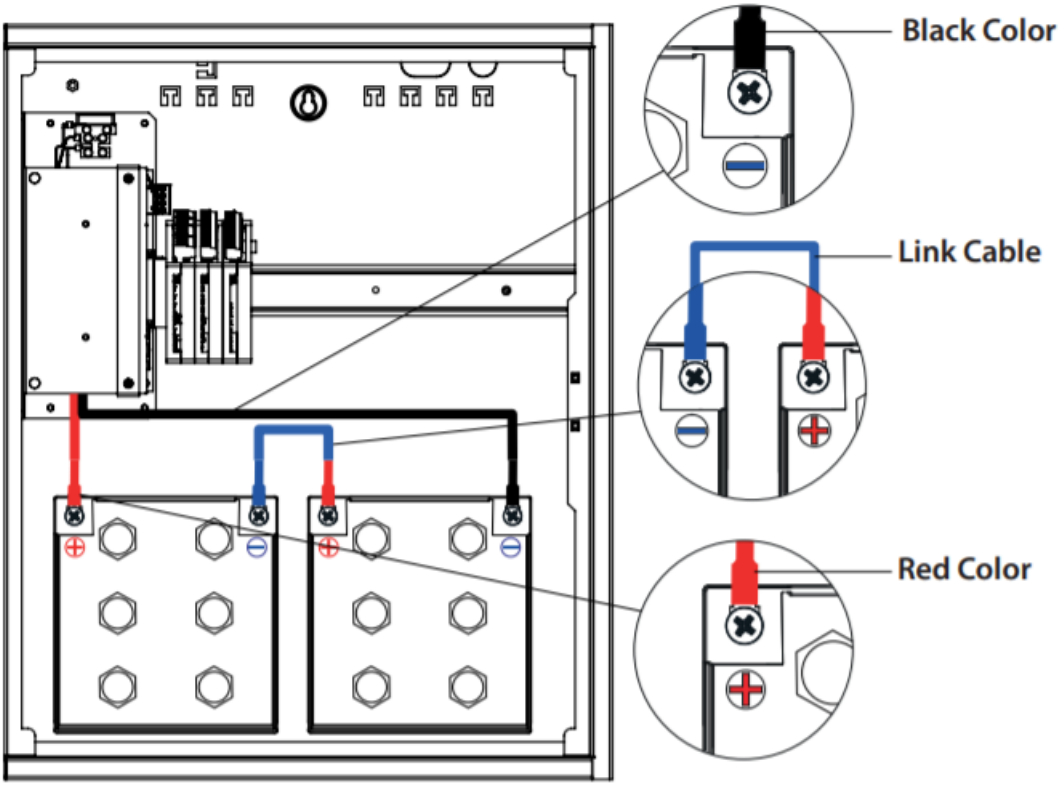

*recommended model FAAM FLG12-26

Do not make the final battery connections until the installation wiring is completed and the system is powered up.
Always connect the **AC Mains** input before connecting the **battery unit.**

21.6 Panel network “CAN” redundant connection

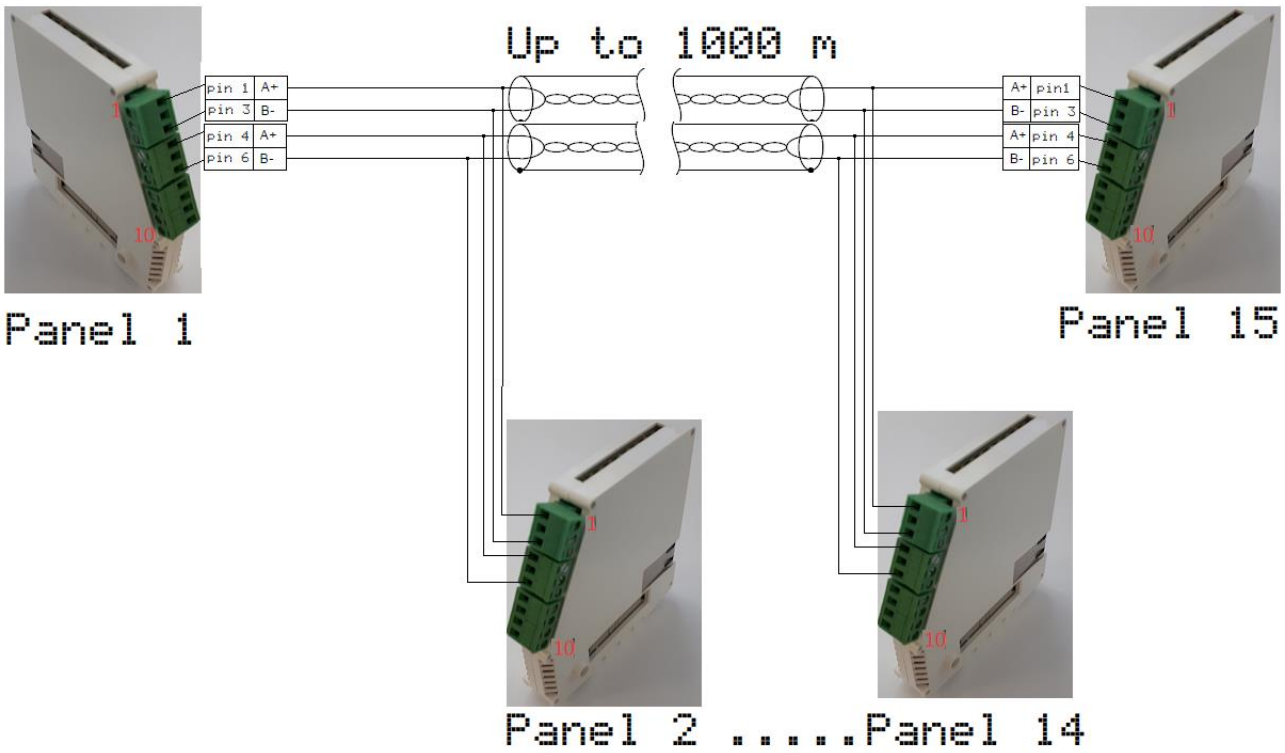

It needs to be placed 120 Ohm resistors at the first and last panel.
(The resistors are connected in parallel to 1 - 3 and 4 - 6 connectors).

Capacity of CAN network is up to 16 panels.

CAN network, transfers only panel events.

Integrity of transmission paths: Redundant CAN network provides full redundancy. In case of any single fault in any of the CAN interfaces, network communication is still possible on another channel.

21.7 Panel - Repeater Connection (RS-485)

Every panel maintained one repeater connection realized by RS485 communication protocol. The maximum distance Panel – Repeater is 100 meters.

Repeater (BUI1) and External zonal indication (BUI2) share one network address which can be set by 4 position DIP switch starting from address 1 (1000) up to 15 (1111) – 1 – ON, 0-OFF

Example: Setting address 3 can be set from DIP1 to DIP4 as ON, ON, OFF, OFF

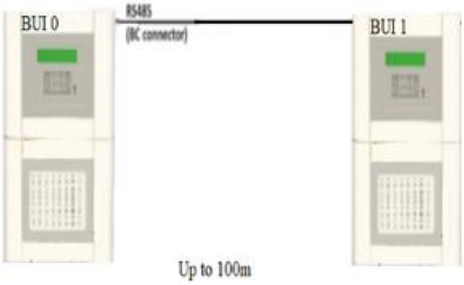

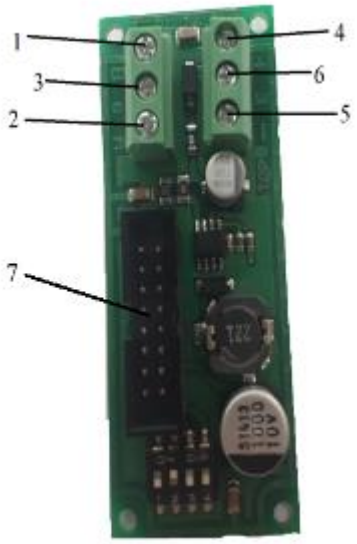

1 – RS 485 B
2 – Panel GND
3 – RS 485 A
4 – +28V
5 – -28V
6 – Earth
7 – Ribbon cable connection to keyboard and display

This board must be connected to Base controller RS485 and 7000M-PSU-160 User Output.

RS485 termination shall be done on both sides of the communication bus. Termination from the control panel side is preset by default. Lastly, the last Repeater must be placed resistance 120Ω on **1** – RS 485 B and **3** – RS 485 A. Each external zonal indication has a 2 position DIP switch. The last Repeater's zonal indication the left board position of the DIP switch DIP2-OFF, the right board indicate the position of DIP switch DIP2-ON.

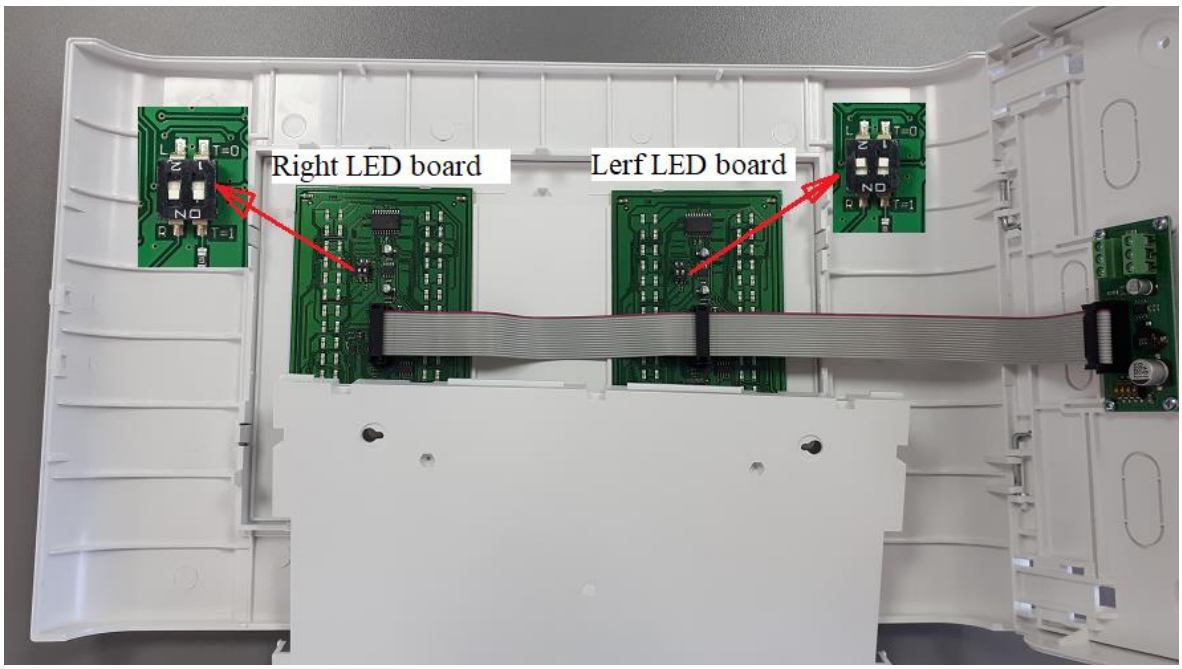

When the External zonal indication is connected to the repeater - the DIP switch of the extension board must be with the same address as the repeater. (if the repeater is on address 1 the extension zonal indication connected to this repeater will be at address 1).

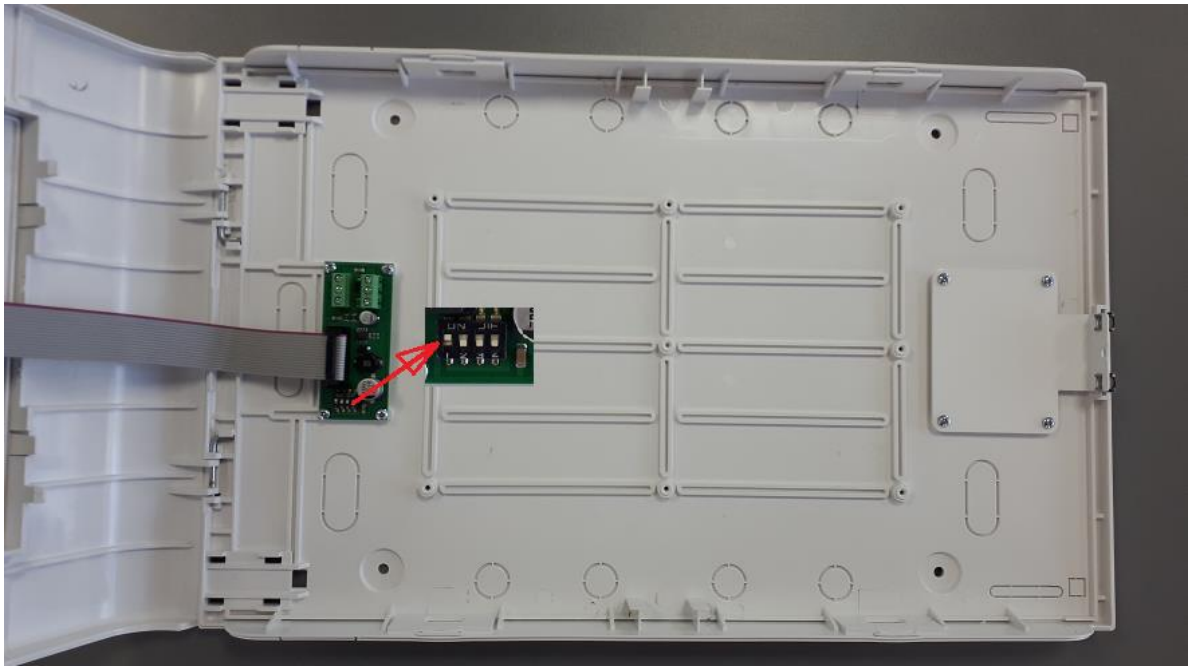

Integrity of transmission paths: RS485 does not support redundant communication. In case of single fault communication could be disturbed which will be indicated on a proper way on the Control panel.

22. Manufacturer of re-initialization of fire alarm counter

PC ONLY

Reset of fire alarm counter can be done only from authorized personnel on Access level 4. This access level is entered over SSH client for Windows OS and encrypted key (apk file) provided by the manufacturer or distributor of the control panel.

Together with encrypted key shall be applied a password for decryption.

To establish access to the file system of the panel, user shall have preinstalled followed applications: Pageant Key List and PuTTY and panel to be connected to the Local area network, connecting LAN cable to the Ethernet port of the panel.

Procedure starts with adding encrypted key. Key shall be provided with applicable password.

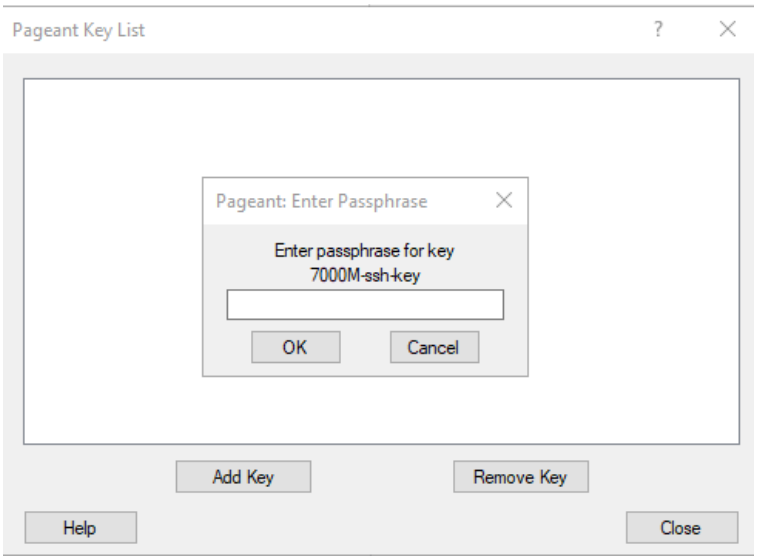

When key is added to the list, start PuTTY SSH client with IP of the panel. IP of the panel can be found in the menu Status/Compon. /Other

```
11:12 [Status/Compon./Other]
 eth0: up running #C8-A0-30-8A-73-3f
 IPv4: 192.168.10.144 (255.255.255.0)
 IPv6: fe80::caa0:30ff:fe8a:733f
```

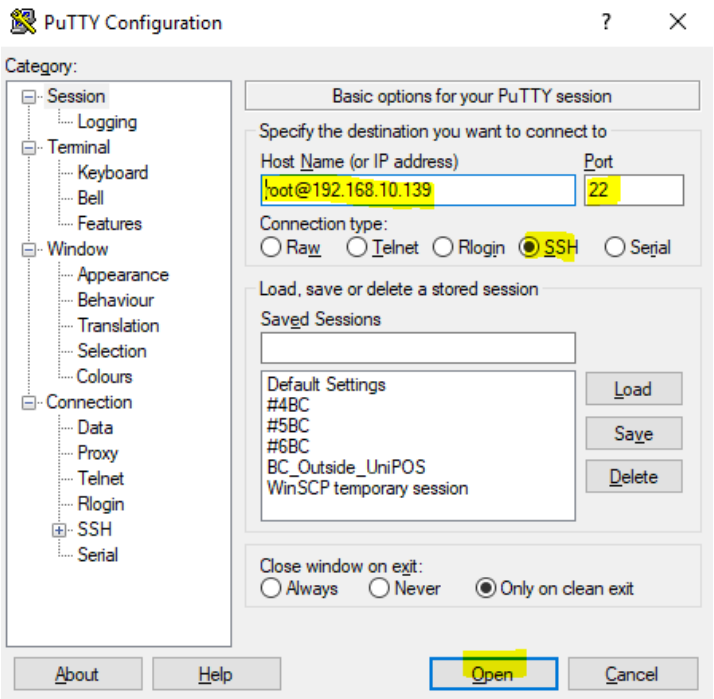

This procedure allows root access to Linux based module. On that way all applications and firmware could be updated.

Than execute commands:

cd/7000M

./clear-fires.sh

Yes

23. System information

From menu **System - > Information** can be acquired information about software and XML scheme version

```
11:12[System/Information]
 UniPOS 7000M (c) Fire Alarm System
 SW: ver.1.0 Dec  7 2020 17:32:56
 XML Schema: ver.1.0
```

24. Panels at network - information

The fire panels are configured separately by the UniConfig application by changing the "Panel-number" and the numbers of the loop controllers "Loop-number" must be consistent. BIO modules have a sequence number only at the local level.

Setting – “System-cluster” activated (checked)

Configured panel - export from the “System-panel” level and is added to the general configuration file by importing at the “System-config” level.

Panel network

Panels in a network exchange their messages via a reserved (double-secured) CAN network. A common log file for the panels in the network is obtained.

113 **02** 15:45:08 07-06-21 Fire alarm point 1 zone 129 loop 3

157 **02** 15:45:08 07-06-21 Activated BIO 2 FBRE output 3

157 **01** 15:45:08 07-06-21 Activated BIO 2 FBRE output 3

150 **02** 15:45:08 07-06-21 Activated BIO 2 output 7 by Panel2 Common

150 **01** 15:45:08 07-06-21 Activated BIO 2 output 7 by Panel1 Common

002 **02** 15:45:09 07-06-21 FIRE DIN signal activated

01 and 02 are the panel numbers - set by "UniConfig: System-panel / Panel number"

Display visualization

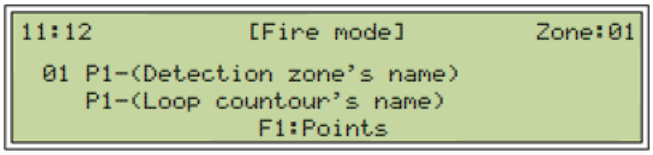

P1 – panel number, panel in fire mode.

If there are FWRE and FBRE outputs programmed on each panel, when these panels are in a network and when a "Fire" or "Fault" event occurs, FWRE and FBRE outputs are activated on all panels.

Printer – if there is a printer to one of the panels in the network, events are printed from the log file of the panel to which the printer is. The log file is common when we have panels in the network. The events contain a panel ID / number.

Network panel event management

– **Fires** – from each panel in the network can be triggered events "Fire" – stop Exits, stop buzzer, and reset the panel / panels.

– **"Disable" "Faults" "Test" "Isolation"** – are displayed on both panels. Disables / Isolation / Zone Test / Detectors are visualized on the display of the panels participating in the network, and their visualization of the additional LED indication only at the local level - the panel from which the respective Zone / Detector is.

Removing or placing Disables, Isolation of Zones / Sensors is performed only from the local panel.

Failure of the **CAN** network is visualized when one or both transmission lines are broken.

25. Initialization of contour devices

Initialization is a verification process in which a check is started to compare the devices in the loop and the configuration XML, to detect exchanged or replaced with new devices. The check is done by device type and ID.

Detections of differences during initialization are saved in the log file of the panel. The logo shows the expected and new device ID, which can be exchanged or replaced with a new one for the loop. In this way, devices are replaced with new, of the same or different type, defective devices.

25.1 Exchange or replacement of devices of the same type

25.1.1 Replacement a devices of the same type

After initialization, the loop retains its operability and the devices are in standby mode, the new device that replaced the old one is initialized and is in operable mode.

After starting the panel is in "Fault Mode" and an informational message is displayed:

```
            7000M Test Company
             7000M Test Site
               [Fault Mode]
Tue 01-01-19 11:12:00       Day[Messages]
```

Information message:

```
11:12          [Messages]          Total:01
 Loop 1 devices changes - see log

                F3:Confirm
```

Messages in archive:

```
11:12      [System/Events/All]      13-23764
 01 11:12 State duty loop 1
 01 11:12 Loop 1 device 4 changed  (7000M L
 01 11:12 Loop 1 device 3 changed  (7000M L
```

```
11:12      [System/Events/All]           13
 01 11:12:00 01-01-20 Loop 1 device change
 3 (7000M Loop-1) (ID1130EA94 -> 1630EA94)
 (Smoke Detector-3)
```

```
11:12      [System/Events/All]           14
 01 11:22:00 01-01-20 Loop 1 device change
 4 (7000M Loop-1) (ID1630EA94 -> 1130EA94)
 (Smoke Detector-4)
```

Panel in "Fault mode":

```
11:12         [Fault Mode]          All:02
 01 =T-Smoke Detector-3
 02 =T-Smoke Detector-4
```

Symbol "=" changed / exchanged device

Clearing the fault:
The panel is in "Fault Mode" and has a "Messages" indication. The log file records the expected and found ID of the swapped/swapped devices. Through the UniConfig software, the configuration file must be updated (replace the old one with the new device ID) and load the XML configuration back into the panel.

25.1.2 Swapped devices of the same type

In the case of exchanged devices, it is necessary to restart the panel, when switching to standby mode and in "Damage mode", the exchanged devices do not have verified positions - they are not in working mode.

The display shows:

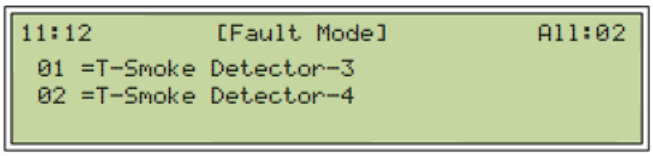

"=" symbol replaced/exchanged device

Clear the fault:

The swapped positions of the devices are recorded in the logs:

```
eveng.log
Loop 1 device 3 changed (ID DF356A16 -> 34366A16)
Loop 1 device 4 changed (ID 1D301B94 -> DF356A16)
```

They are returned to their positions corresponding to the XML configuration. A panel restart is required.

25.2 Swapped devices of different types

After loop initialization, only swapped devices of a different type are not initialized - they are not operational. From the entry in the log file, the swapped devices are determined and returned to their positions in the loop corresponding to the XML configuration.

25.3 Replacing devices of different types

After loop initialization, the ID of the device replaced with a new device is taken from the entry in the log file, the old device in the loop is deleted in the configuration XML via UniConfig, a new device is created and configured, which must have the same serial number in the loop as the deleted device. After saving the changes made, the XML file is loaded into the panel.